2026 NINJA H2® CARBON ABS

PARTS DIAGRAM

Oil Pan

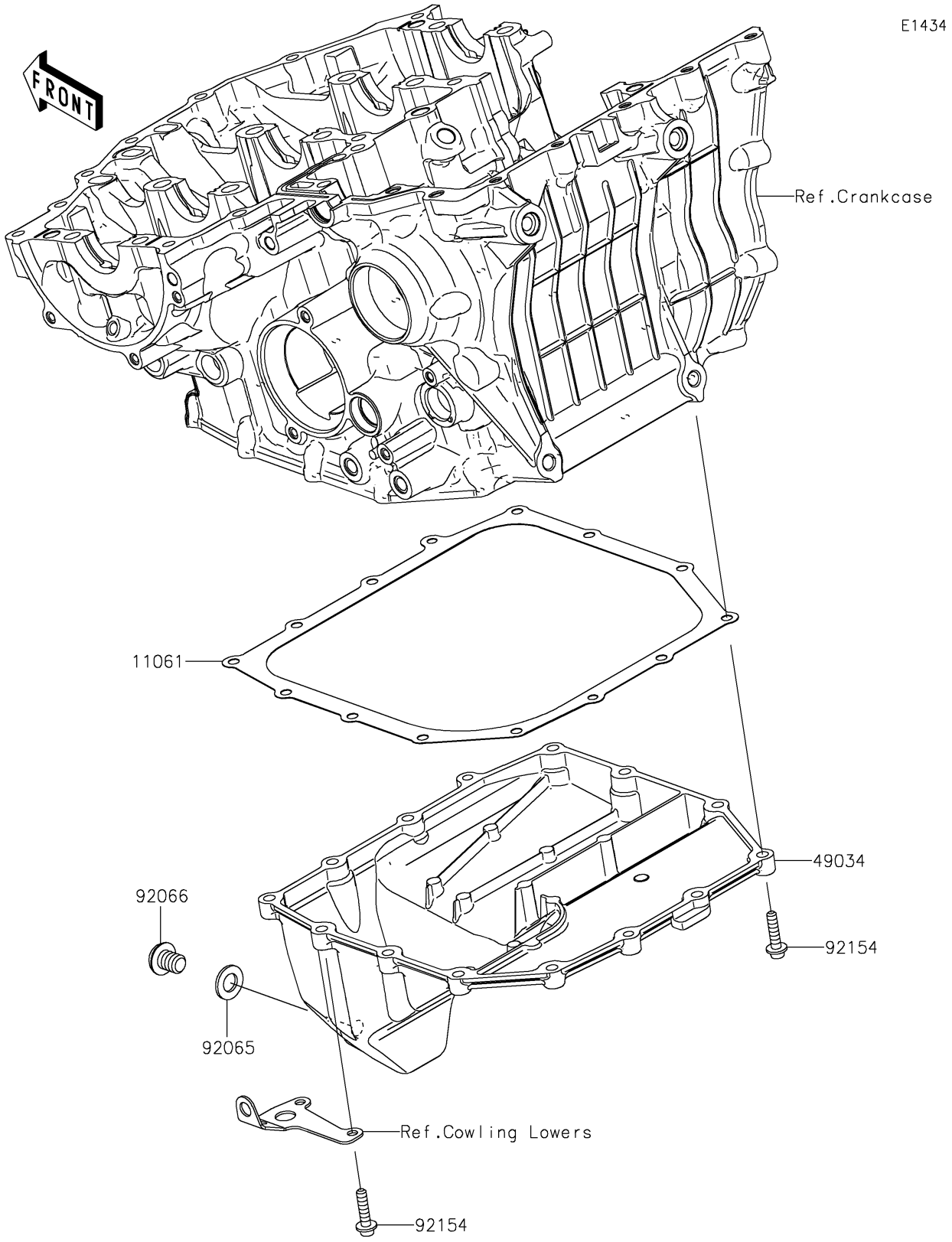

© 2026 Kawasaki Motors Corp., U.S.A.

2026 NINJA H2® CARBON ABS

PARTS LIST

Oil Pan

ITEM NAME	PART NUMBER	QUANTITY
GASKET,OIL PAN (Ref # 11061)	11061-0943	1
PAN-OIL (Ref # 49034)	49034-0572	1
GASKET,12X22X2 (Ref # 92065)	92065-097	1
PLUG,DRAIN (Ref # 92066)	92066-0799	1
BOLT,SOCKET,6X25 (Ref # 92154)	92154-1461	14

© 2026 Kawasaki Motors Corp., U.S.A.