2025 BRUTE FORCE® 450 4x4

PARTS DIAGRAM

Headlight(s)

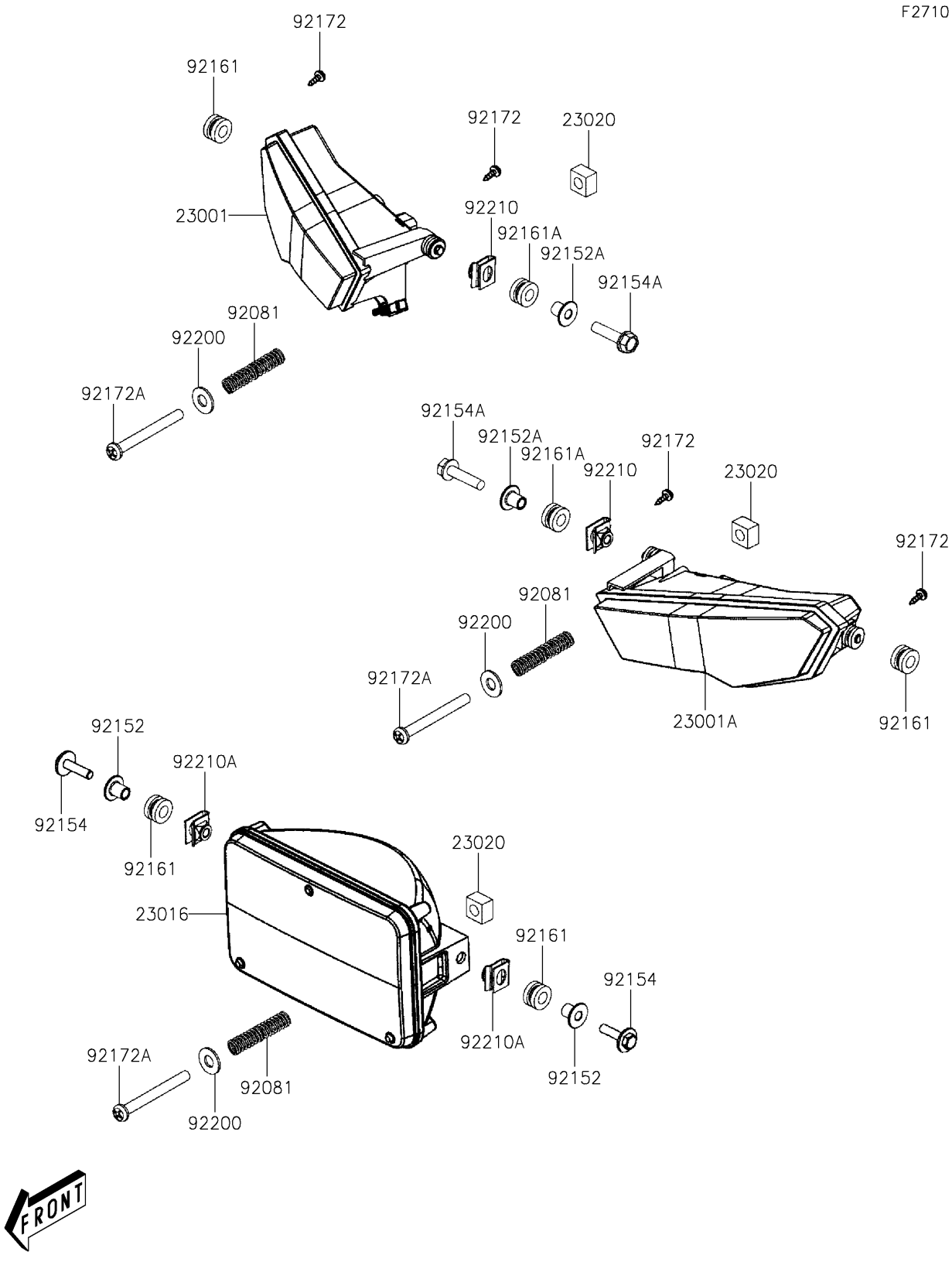

© 2026 Kawasaki Motors Corp., U.S.A.

2025 BRUTE FORCE® 450 4x4

PARTS LIST

Headlight(s)

ITEM NAME	PART NUMBER	QUANTITY
LAMP-ASSY-HEAD,RH (Ref # 23001)	23001-Y005	1
LAMP-ASSY-HEAD,LH (Ref # 23001A)	23001-Y006	1
LAMP-ASSY,WORK (Ref # 23016)	23016-Y005	1
NUT,4MM,FOCUS ADJUST (Ref # 23020)	23020-018	3
SPRING,FOCUS ADJUST (Ref # 92081)	92081-1896	3
COLLAR (Ref # 92152)	92152-Y013	2
COLLAR (Ref # 92152A)	92152-Y090	2
BOLT,6X25 (Ref # 92154)	92154-Y099	2
BOLT,FLANGE,6X28 (Ref # 92154A)	92154-Y244	2
DAMPER (Ref # 92161)	92161-Y006	4
DAMPER (Ref # 92161A)	92161-Y066	2
SCREW,TAPPING,5X12 (Ref # 92172)	92172-Y038	4
SCREW,PAN,4X40 (Ref # 92172A)	92172-Y098	3
WASHER,PLAIN,4.5X10X0.8 (Ref # 92200)	92200-Y126	3
NUT,6MM (Ref # 92210)	92210-Y011	2
NUT,6MM (Ref # 92210A)	92210-Y089	2

© 2026 Kawasaki Motors Corp., U.S.A.