2026 JET SKI® ST® 160X

PARTS DIAGRAM

Fuel Pump

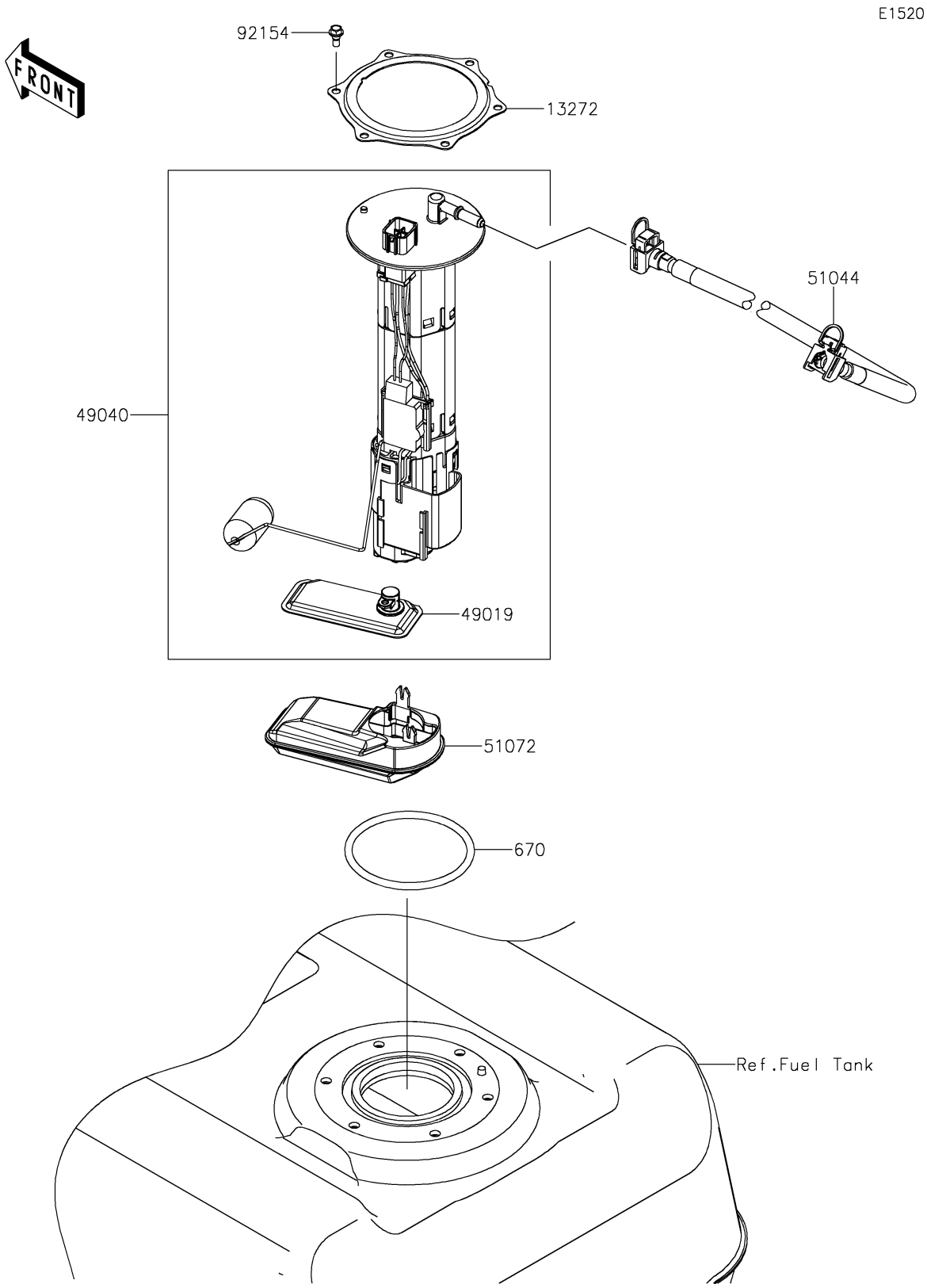

© 2026 Kawasaki Motors Corp., U.S.A.

2026 JET SKI® ST® 160X

PARTS LIST

Fuel Pump

ITEM NAME	PART NUMBER	QUANTITY
PLATE (Ref # 13272)	13272-4436	1
FILTER-FUEL (Ref # 49019)	49019-0034	1
PUMP-FUEL (Ref # 49040)	49040-0826	1
TUBE-ASSY (Ref # 51044)	51044-1244	1
CHAMBER-FUEL (Ref # 51072)	51072-0008	1
BOLT,FUEL PUMP (Ref # 92154)	92154-3856	6
O RING (Ref # 670)	670E5090	1

© 2026 Kawasaki Motors Corp., U.S.A.