2023 MULE SX™ 4x4 FE

PARTS DIAGRAM

Cylinder Head

Kawasaki
Let the Good Times Roll®

E1111

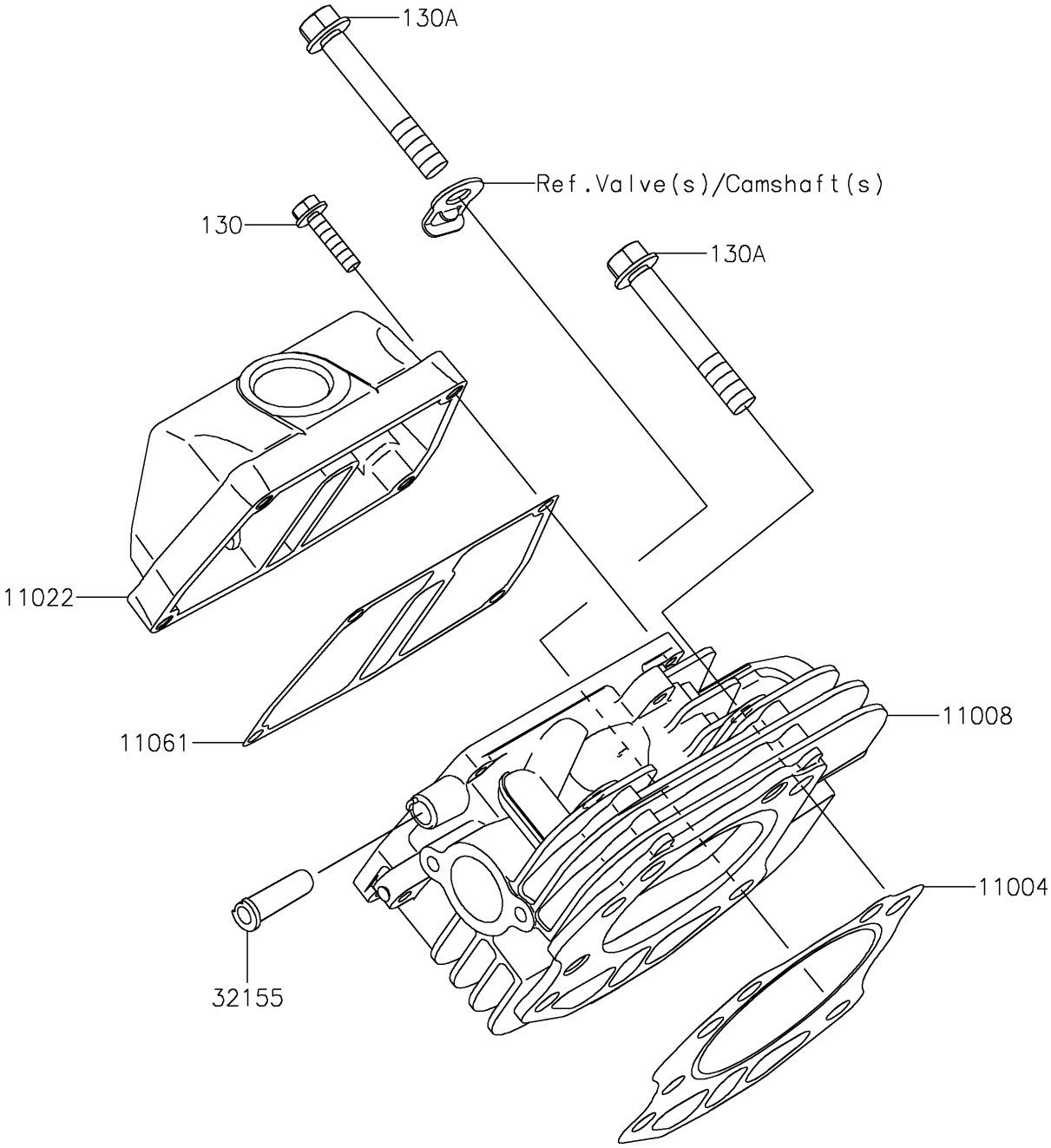

© 2026 Kawasaki Motors Corp., U.S.A.

2023 MULE SX™ 4x4 FE

PARTS LIST

Cylinder Head

ITEM NAME	PART NUMBER	QUANTITY

© 2026 Kawasaki Motors Corp., U.S.A.