2025 Ridge XR HVAC

PARTS DIAGRAM

Front Hubs/Brakes

F2230

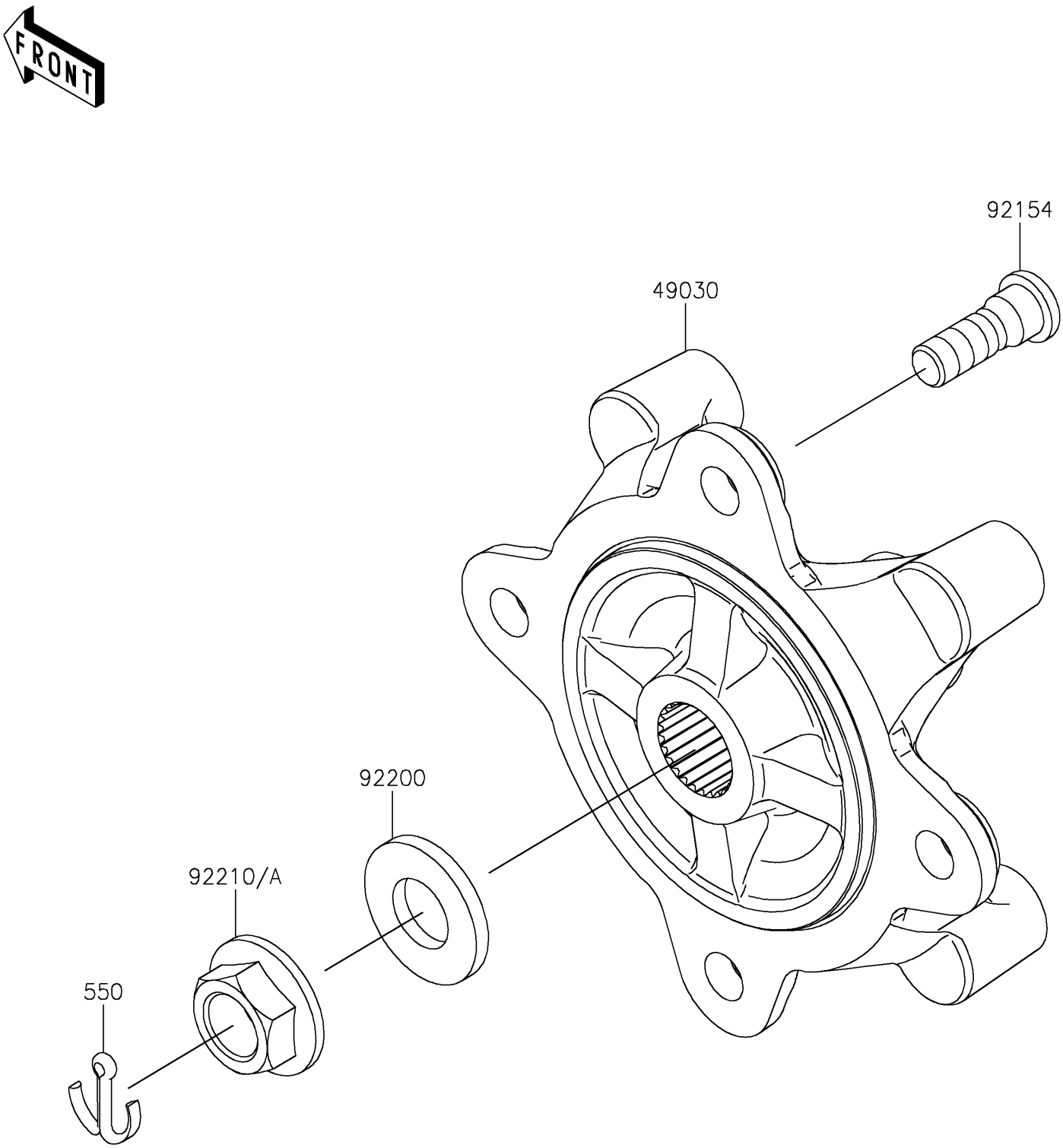

© 2026 Kawasaki Motors Corp., U.S.A.

2025 Ridge XR HVAC

PARTS LIST

Front Hubs/Brakes

ITEM NAME	PART NUMBER	QUANTITY
HUB,FR (Ref # 49030)	49030-0570	2
BOLT,12MM (Ref # 92154)	92154-7074	8
WASHER,20.3X41X4.5 (Ref # 92200)	92200-2609	2
NUT,FLANGED,20MM (Ref # 92210)	92210-1921	1
NUT,FLANGED,20MM (Ref # 92210A)	92210-2093	1
PIN-COTTER,4.0X30 (Ref # 550)	550AA4030	2

© 2026 Kawasaki Motors Corp., U.S.A.