2025 RIDGE® LIMITED HVAC

PARTS DIAGRAM

Drive Shaft-Front

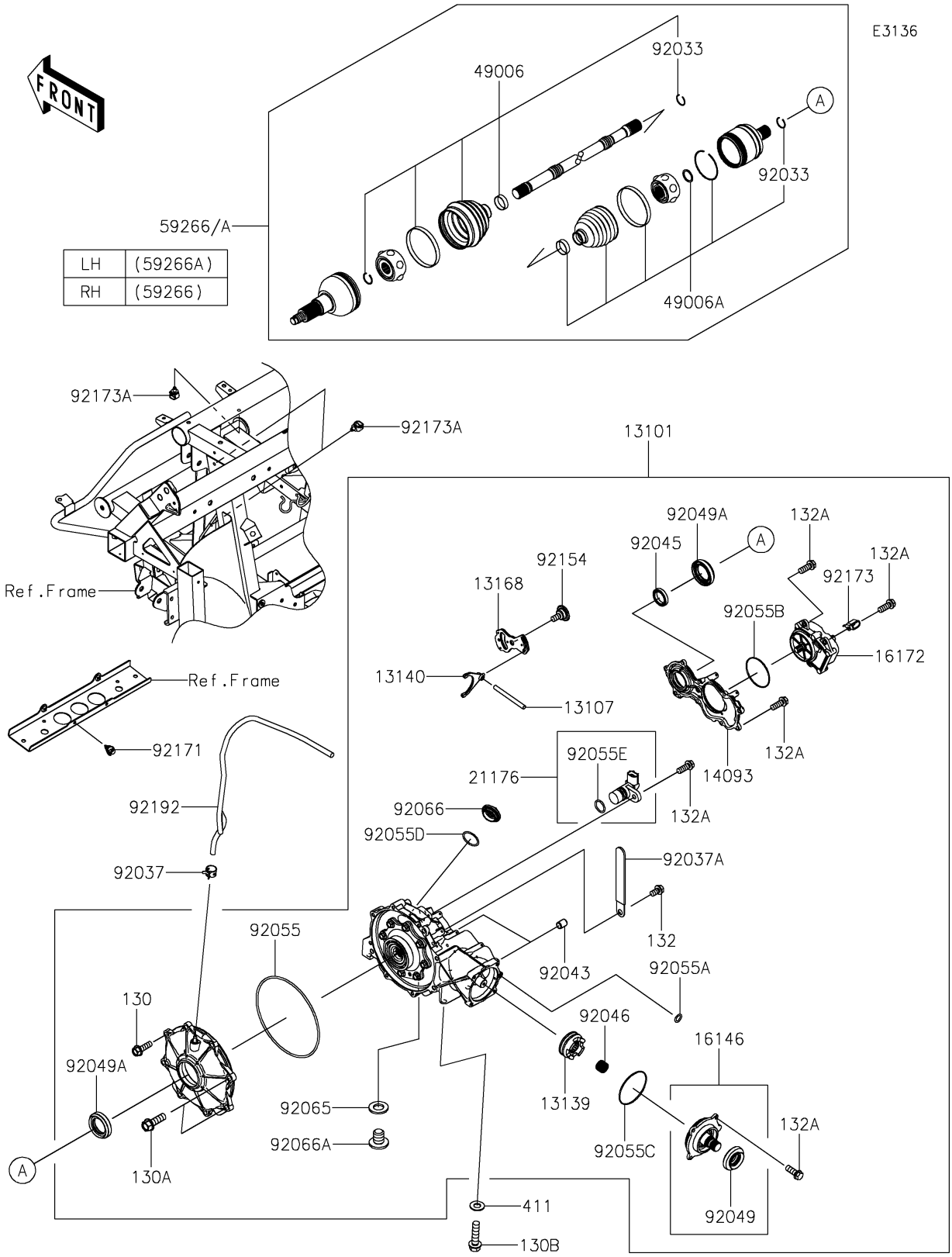

LH	(59266A)
RH	(59266)

© 2026 Kawasaki Motors Corp., U.S.A.

2025 RIDGE® LIMITED HVAC

PARTS LIST

Drive Shaft-Front

ITEM NAME	PART NUMBER	QUANTITY
GEAR-ASSY,FRONT DIFFERENTIAL (Ref # 13101)	13101-0727	1
SHAFT (Ref # 13107)	13107-0887	1
SHIFTER (Ref # 13139)	13139-0039	1
FORK-SHIFT (Ref # 13140)	13140-0675	1
LEVER (Ref # 13168)	13168-0920	1
COVER,RH (Ref # 14093)	14093-0707	1
COVER-ASSY,INPUT SHAFT (Ref # 16146)	16146-0740	1
ACTUATOR (Ref # 16172)	16172-0030	1
SENSOR (Ref # 21176)	21176-0891	1
BOOT,OUTSIDE (Ref # 49006)	49006-0655	2
BOOT,INSIDE (Ref # 49006A)	49006-0656	2
JOINT-BALL,RH (Ref # 59266)	59266-0777	1
JOINT-BALL,LH (Ref # 59266A)	59266-0778	1
RING-SNAP (Ref # 92033)	92033-0837	4
CLAMP,TUBE (Ref # 92037)	92037-1505	1
CLAMP (Ref # 92037A)	92037-1993	1
PIN,DOWEL,8X10 (Ref # 92043)	92043-1302	2
BEARING-BALL,6806 (Ref # 92045)	92045-0826	1
BEARING-NEEDLE (Ref # 92046)	92046-1234	1
SEAL-OIL (Ref # 92049)	92049-0160	1
SEAL-OIL,TC9Y 40X62X10X17.2 (Ref # 92049A)	92049-0815	2
RING-O,190.2X4.2 (Ref # 92055)	92055-0121	1
RING-O,7.5X1.5 (Ref # 92055A)	92055-0756	1
RING-O,1.9X71.8 (Ref # 92055B)	92055-0781	1
RING-O (Ref # 92055C)	92055-081	1
RING-O,35.8MM (Ref # 92055D)	92055-1281	1
RING-O (Ref # 92055E)	92055-1639	1
GASKET,12X22X2 (Ref # 92065)	92065-097	1
PLUG,36X7.5 (Ref # 92066)	92066-0744	1

© 2026 Kawasaki Motors Corp., U.S.A.

2025 RIDGE® LIMITED HVAC

PARTS LIST

Drive Shaft-Front

ITEM NAME	PART NUMBER	QUANTITY
PLUG,12X15 (Ref # 92066A)	92066-0943	1
BOLT (Ref # 92154)	92154-4462	1
CLAMP,13MM DIA. (Ref # 92171)	92171-1415	1
CLAMP (Ref # 92173)	92173-0059	1
CLAMP,12MM DIA. (Ref # 92173A)	92173-0736	3
TUBE,5.8X10.8X940 (Ref # 92192)	92192-2805	1
BOLT-FLANGED,8X25 (Ref # 130)	130CA0825	6
BOLT-FLANGED,10X30 (Ref # 130A)	130CA1030	2
BOLT-FLANGED,10X40 (Ref # 130B)	130CA1040	4
BOLT-FLANGED-SMALL,6X10 (Ref # 132)	132BA0610	1
BOLT-FLANGED-SMALL,6X16 (Ref # 132A)	132BA0616	16
WASHER-PLAIN,10MM (Ref # 411)	411AA1000	4

© 2026 Kawasaki Motors Corp., U.S.A.