2025 Ridge Limited

PARTS DIAGRAM

Air Cleaner

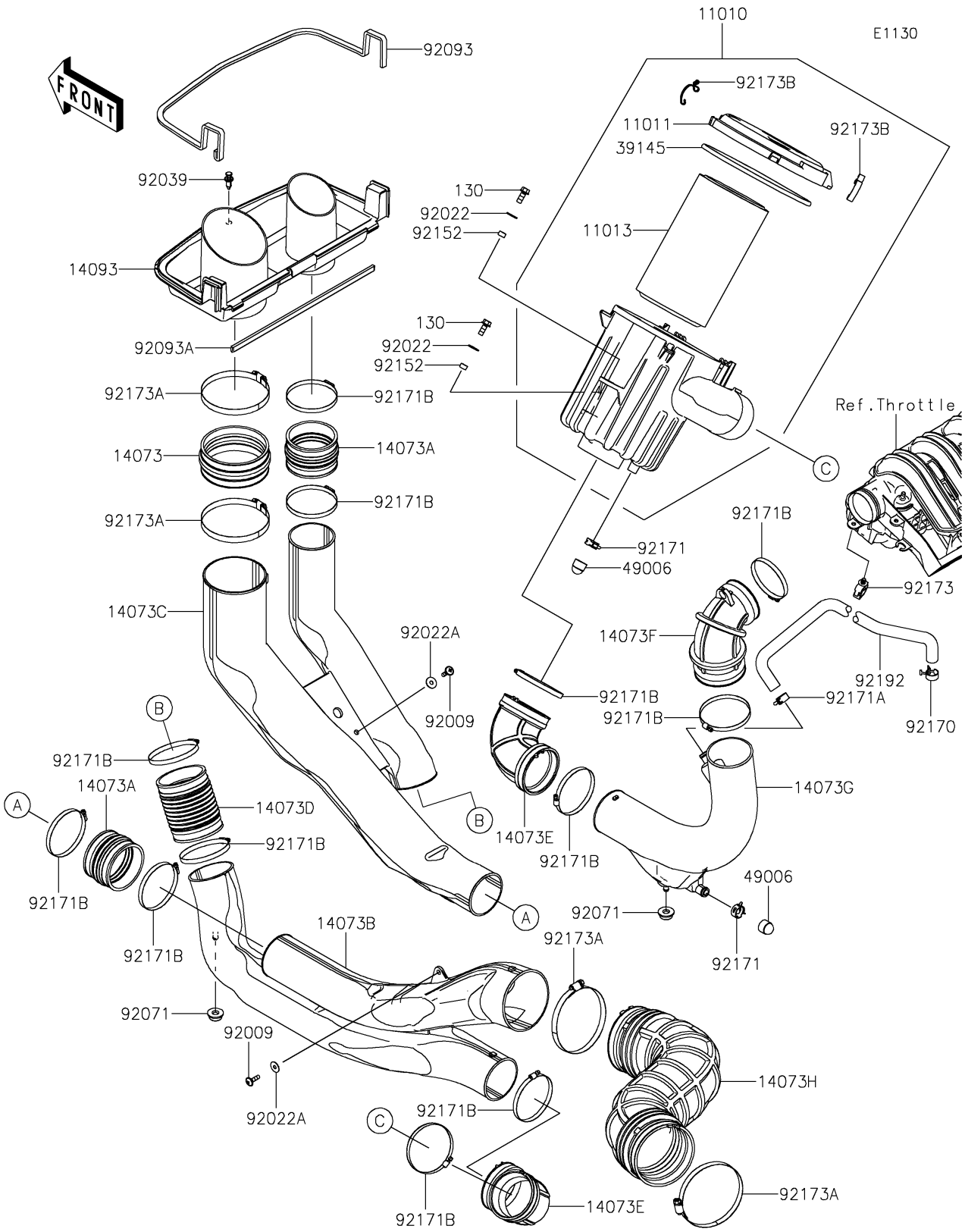

© 2026 Kawasaki Motors Corp., U.S.A.

2025 Ridge Limited

PARTS LIST

Air Cleaner

ITEM NAME	PART NUMBER	QUANTITY

© 2026 Kawasaki Motors Corp., U.S.A.