# 2025 Ridge HVAC

## PARTS DIAGRAM

### Sun Top

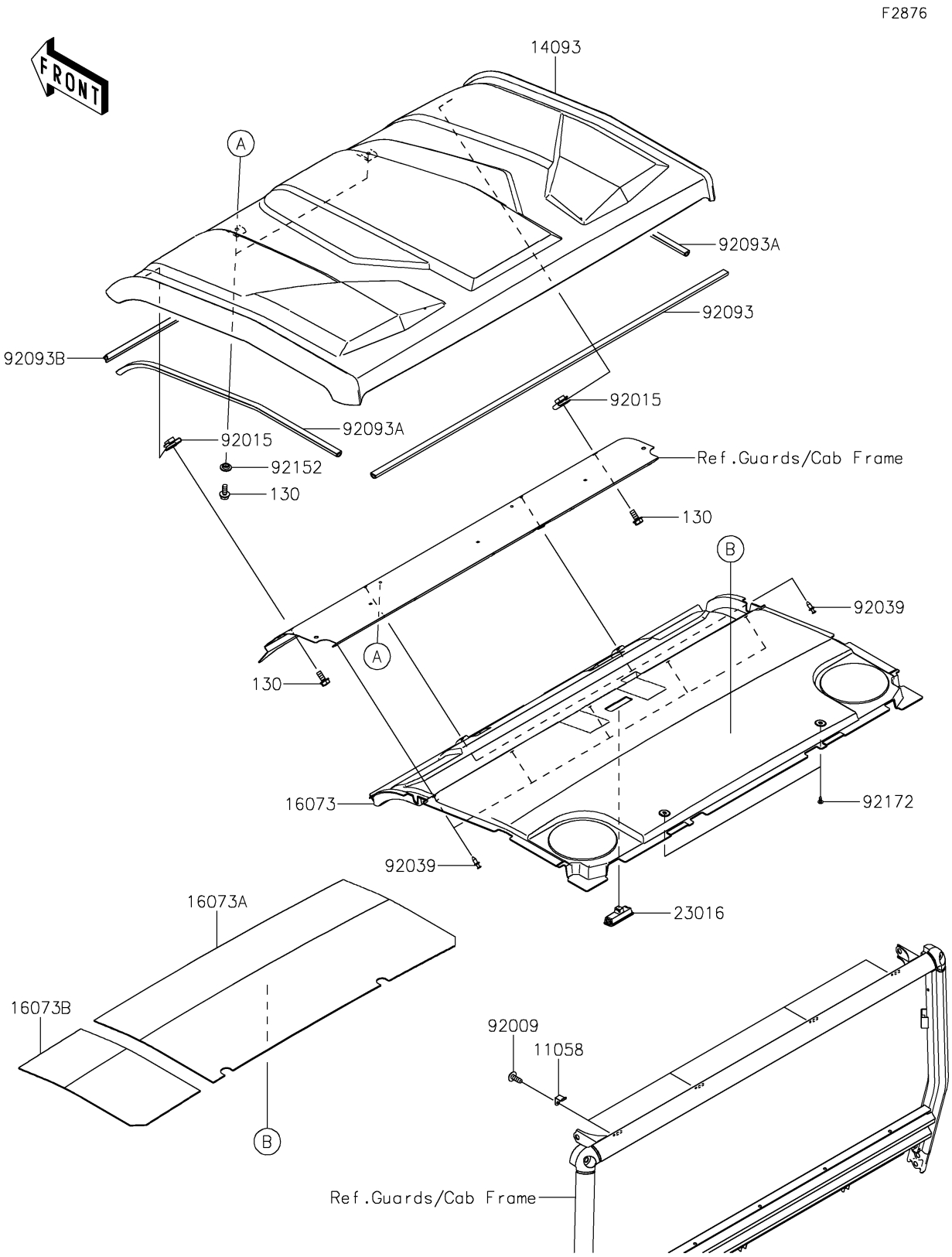


© 2026 Kawasaki Motors Corp., U.S.A.

# 2025 Ridge HVAC

## PARTS LIST

### Sun Top

| ITEM NAME | PART NUMBER | QUANTITY |
|---|---|---|
| BRACKET,ROOF (Ref # 11058) | 11058-0254 | 4 |
| COVER,ROOF (Ref # 14093) | 14093-1352 | 1 |
| INSULATOR,ROOM LIGHT (Ref # 16073) | 16073-0979 | 1 |
| INSULATOR,HEAT,RH (Ref # 16073A) | 16073-0981 | 1 |
| INSULATOR,HEAT,LH (Ref # 16073B) | 16073-0982 | 1 |
| LAMP-ASSY,ROOM (Ref # 23016) | 23016-0673 | 1 |
| SCREW,TAPPING,6X16 (Ref # 92009) | 92009-1166 | 4 |
| NUT,6MM (Ref # 92015) | 92015-1602 | 2 |
| RIVET (Ref # 92039) | 92039-0776 | 7 |
| SEAL,ROOF,RR (Ref # 92093) | 92093-0778 | 1 |
| SEAL,ROOF,SIDE (Ref # 92093A) | 92093-0779 | 2 |
| SEAL,ROOF,FR (Ref # 92093B) | 92093-0812 | 1 |
| COLLAR,6.3X9.5X4.1 (Ref # 92152) | 92152-1571 | 2 |
| SCREW,6X16 (Ref # 92172) | 92172-0284 | 2 |
| BOLT-FLANGED,6X14 (Ref # 130) | 130BA0614 | 4 |

© 2026 Kawasaki Motors Corp., U.S.A.