2025 Ridge HVAC

PARTS DIAGRAM

Frame

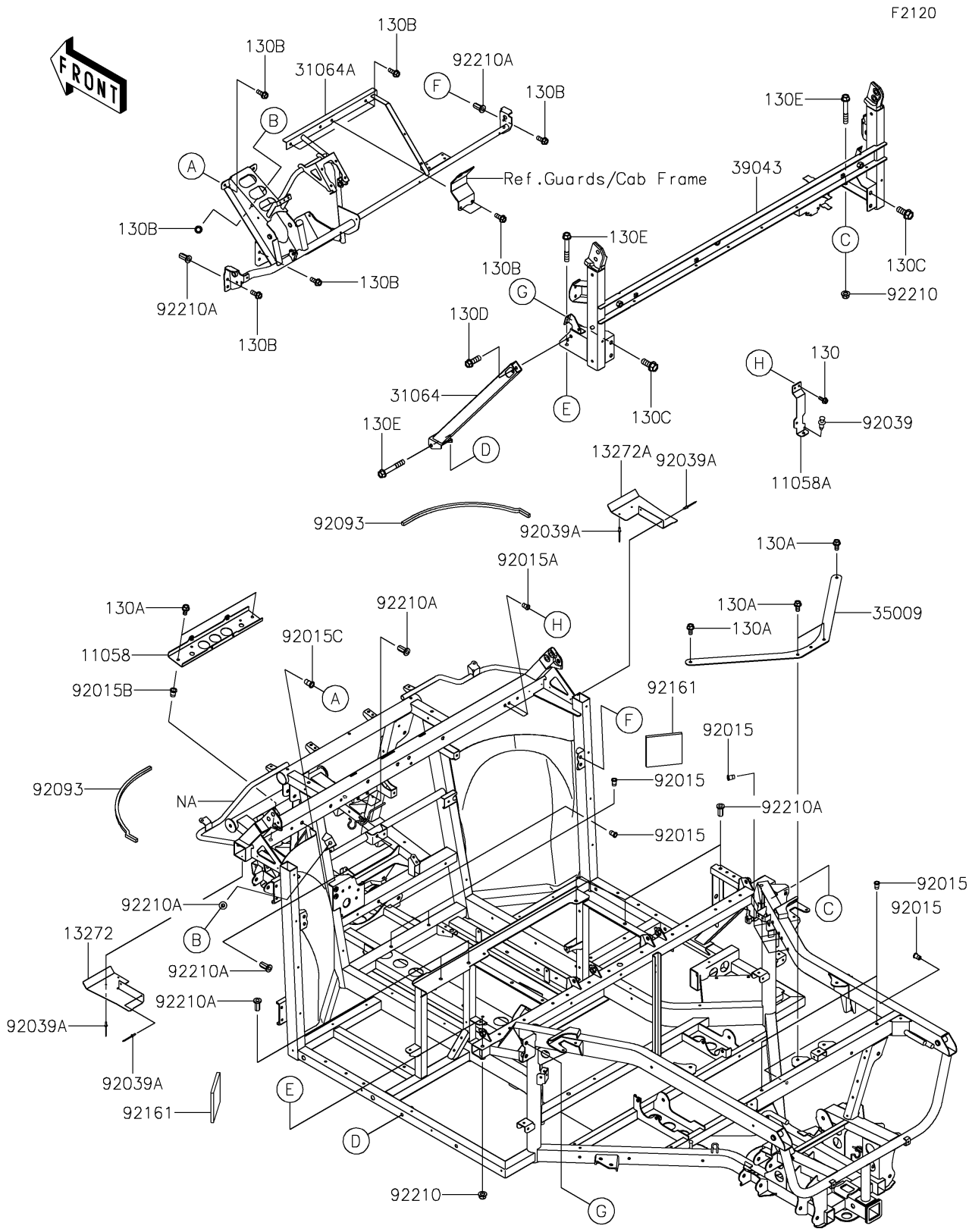

© 2026 Kawasaki Motors Corp., U.S.A.

2025 Ridge HVAC

PARTS LIST

Frame

ITEM NAME	PART NUMBER	QUANTITY
BRACKET,RADIATOR (Ref # 11058)	11058-0119	1
BRACKET,HVAC,RH (Ref # 11058A)	11058-0278	1
PLATE,MUD GUARD,LH (Ref # 13272)	13272-4466	1
PLATE,MUD GUARD,RH (Ref # 13272A)	13272-4467	1
PIPE-COMP,TANK SIDE (Ref # 31064)	31064-0748	1
PIPE-COMP,DASHBOARD (Ref # 31064A)	31064-0750	1
BRACE (Ref # 35009)	35009-0050	1
CROSSMEMBER-COMP,B-PILLAR,LWR (Ref # 39043)	39043-0038	1
NUT,POP,6MM,L=15 (Ref # 92015)	92015-1791	10
NUT,POP,6MM,L=16.5 (Ref # 92015A)	92015-1792	2
NUT,POP,8MM,L=16.5 (Ref # 92015B)	92015-1793	2
NUT,POP,8MM,L=18 (Ref # 92015C)	92015-1794	6
RIVET (Ref # 92039)	92039-0776	1
RIVET,3.2X8 (Ref # 92039A)	92039-3763	8
SEAL,10X10X500 (Ref # 92093)	92093-0784	2
DAMPER,125X125X10 (Ref # 92161)	92161-2574	2
NUT,LOCK,FLANGED,10MM (Ref # 92210)	92210-0276	2
NUT,RIVET (Ref # 92210A)	92210-1949	13
BOLT-FLANGED,6X16 (Ref # 130)	130BA0616	2
BOLT-FLANGED,8X16 (Ref # 130A)	130BA0816	6
BOLT-FLANGED,8X20 (Ref # 130B)	130BA0820	13
BOLT-FLANGED,12X30 (Ref # 130C)	130BA1230	4
BOLT-FLANGED,10X30 (Ref # 130D)	130CA1030	2
BOLT-FLANGED,10X65 (Ref # 130E)	130CA1065	3

© 2026 Kawasaki Motors Corp., U.S.A.