2025 Ridge HVAC

PARTS DIAGRAM

Crankcase

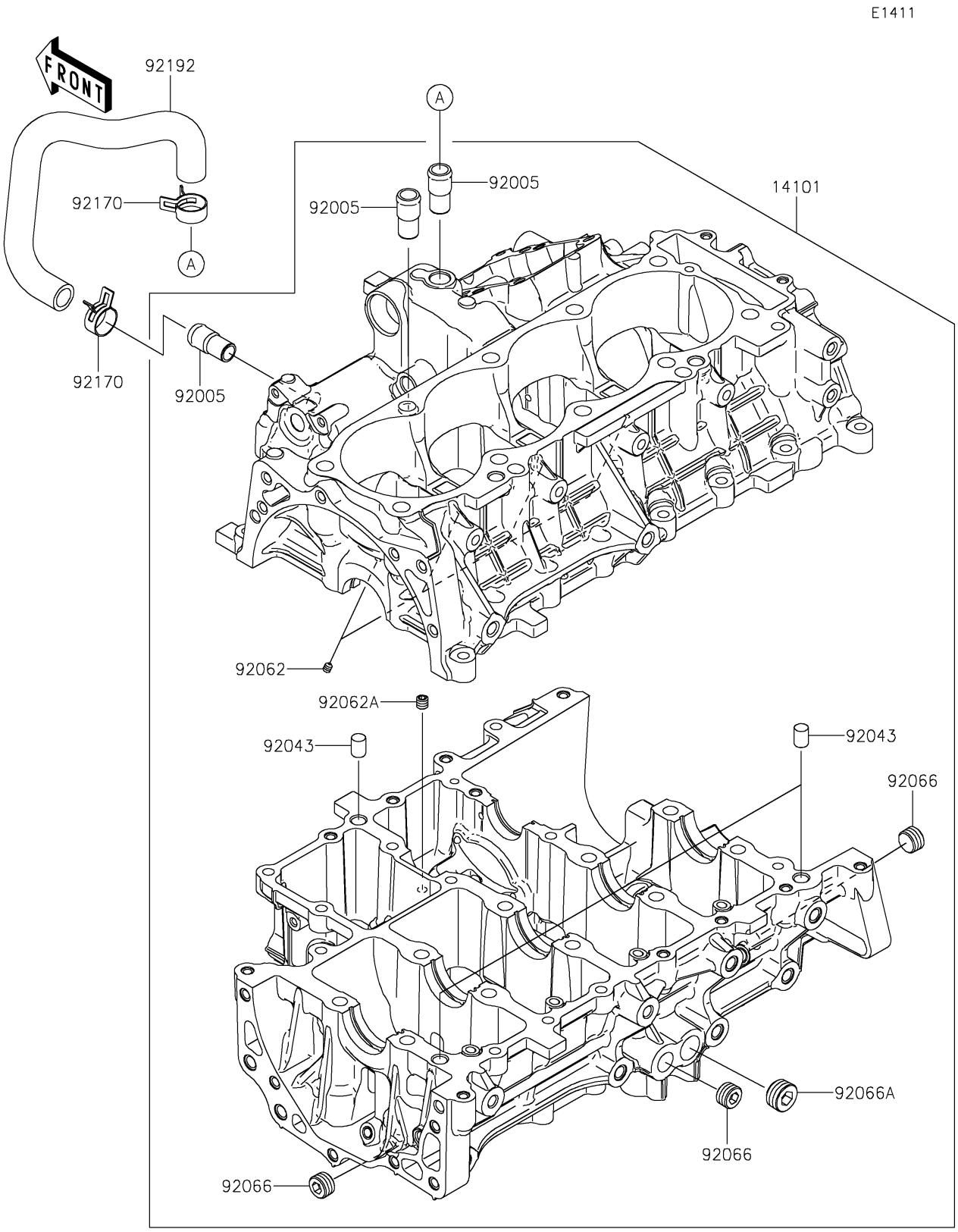

© 2026 Kawasaki Motors Corp., U.S.A.

2025 Ridge HVAC

PARTS LIST

Crankcase

ITEM NAME	PART NUMBER	QUANTITY
SET-CRANKCASE (Ref # 14101)	14101-0010	1
FITTING,BREATHER (Ref # 92005)	92005-1238	3
PIN,10X14 (Ref # 92043)	92043-1506	3
NOZZLE (Ref # 92062)	92062-0004	4
NOZZLE (Ref # 92062A)	92062-0046	1
PLUG (Ref # 92066)	92066-0831	3
PLUG (Ref # 92066A)	92066-3779	1
CLAMP (Ref # 92170)	92170-1060	2
TUBE,BLOWBY GAS (Ref # 92192)	92192-2972	1

© 2026 Kawasaki Motors Corp., U.S.A.