2026 MULE PRO-DXT™ EPS

PARTS DIAGRAM

Decals

F2861

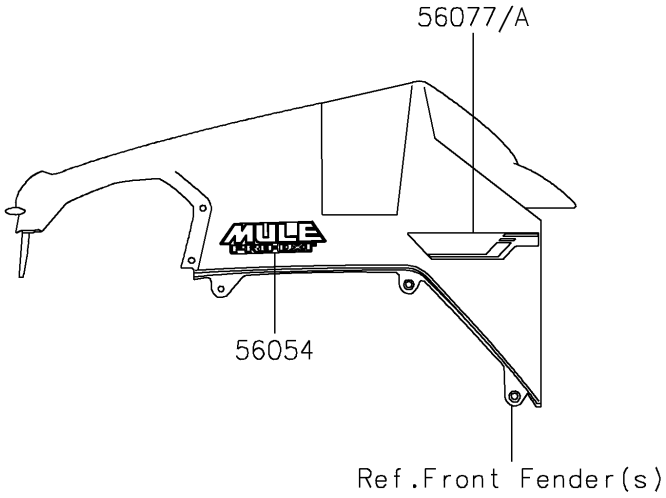

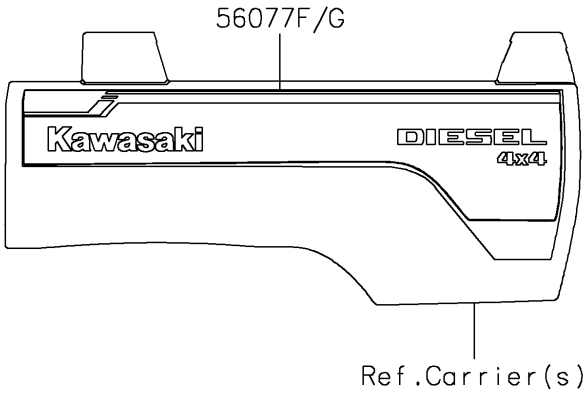

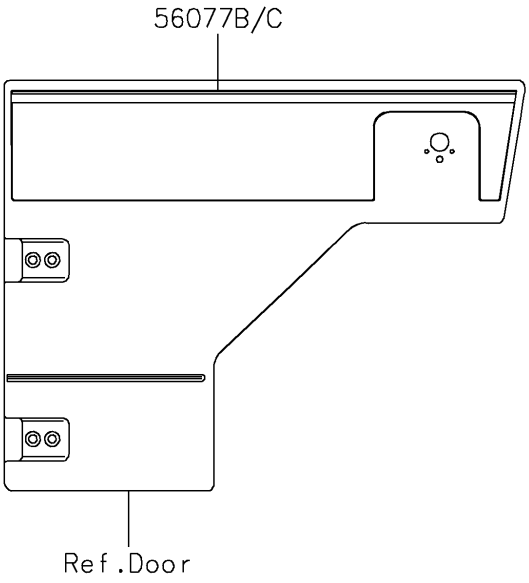

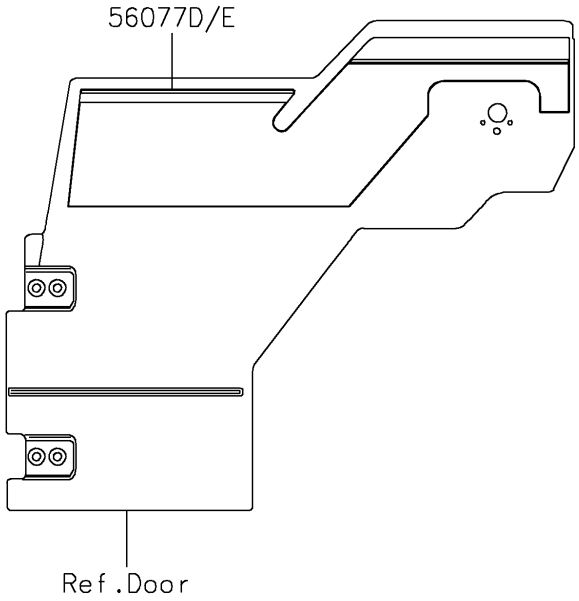

© 2026 Kawasaki Motors Corp., U.S.A.

2026 MULE PRO-DXT™ EPS

PARTS LIST

Decals

ITEM NAME	PART NUMBER	QUANTITY
MARK,FR FENDER,MULE PRO-DXT (Ref # 56054)	56054-2428	2
PATTERN,FR FENDER,LH (Ref # 56077)	56077-1416	1
PATTERN,FR FENDER,RH (Ref # 56077A)	56077-1417	1
PATTERN,SIDE GUARD,LH,FR (Ref # 56077B)	56077-1418	1
PATTERN,SIDE GUARD,RH,FR (Ref # 56077C)	56077-1419	1
PATTERN,SIDE GUARD,LH,RR (Ref # 56077D)	56077-1420	1
PATTERN,SIDE GUARD,RH,RR (Ref # 56077E)	56077-1421	1
PATTERN,CARRIER PANEL,LH (Ref # 56077F)	56077-1422	1
PATTERN,CARRIER PANEL,RH (Ref # 56077G)	56077-1423	1

© 2026 Kawasaki Motors Corp., U.S.A.