2005 Vulcan 1600 Nomad

PARTS DIAGRAM

Frame Fittings

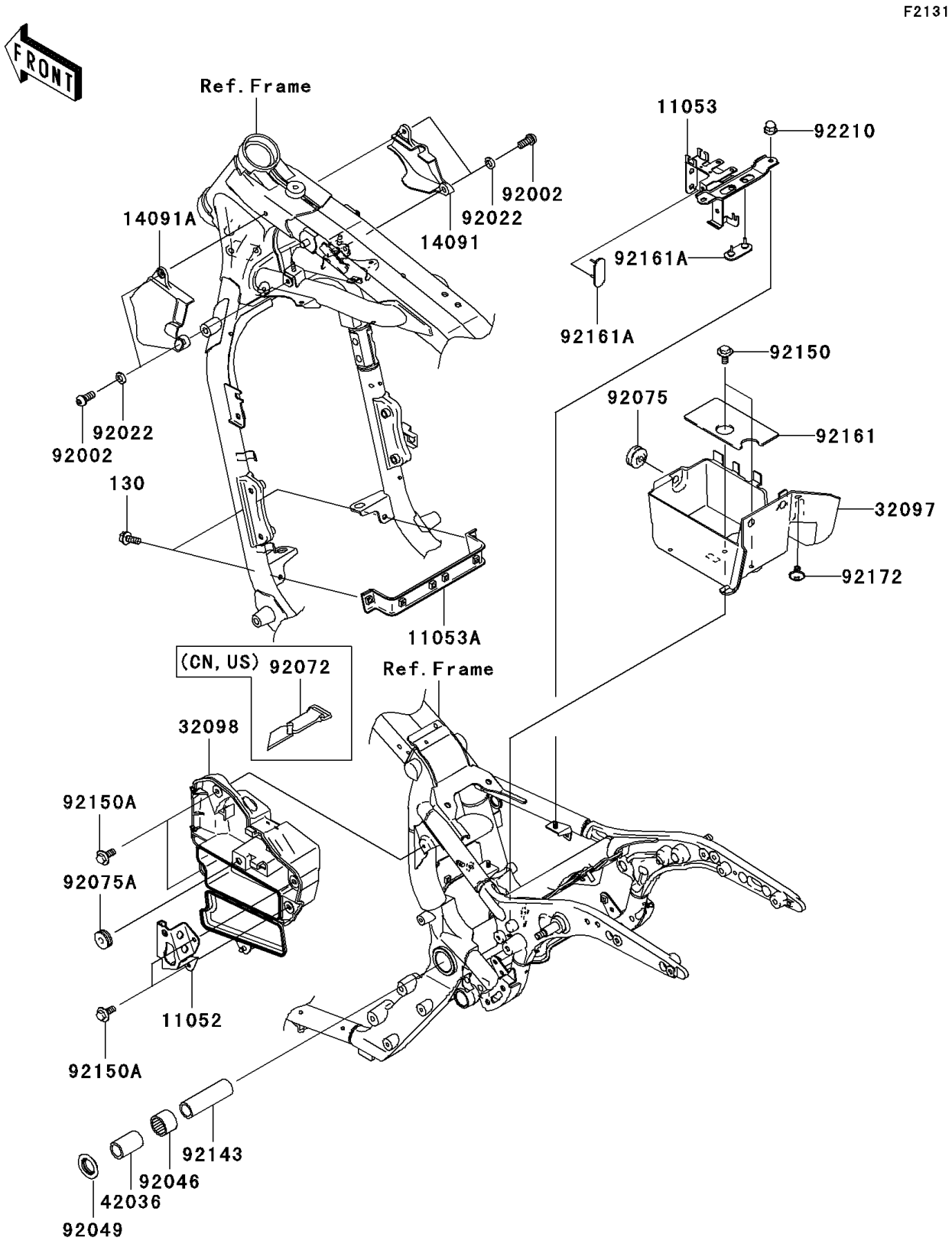

© 2026 Kawasaki Motors Corp., U.S.A.

2005 Vulcan 1600 Nomad

PARTS LIST

Frame Fittings

ITEM NAME	PART NUMBER	QUANTITY
BOLT-FLANGED,6X16,BLACK (Ref # 130)	130J0616	2
BRACKET,SIDE COVER LOCK (Ref # 11052)	11052-1234	1
BRACKET,BATTERY BAND (Ref # 11053)	11053-0289	1
BRACKET,REGULATOR (Ref # 11053A)	11053-0434	1
COVER,HEAD PIPE,RH (Ref # 14091)	14091-0054	1
COVER,HEAD PIPE,LH (Ref # 14091A)	14091-0092	1
CASE-BATTERY (Ref # 32097)	32097-1192	1
CASE-TOOL (Ref # 32098)	32098-1137	1
SLEEVE,L=45 (Ref # 42036)	42036-1330	2
BOLT,6X14 (Ref # 92002)	92002-1700	4
WASHER,6.2X11X1.5 (Ref # 92022)	92022-183	4
BEARING-NEEDLE,BM2824 (Ref # 92046)	92046-1202	2
SEAL-OIL (Ref # 92049)	92049-1181	2
DAMPER (Ref # 92075)	92075-1067	1
DAMPER (Ref # 92075A)	92075-1629	1
COLLAR,20.2X27X90 (Ref # 92143)	92143-1878	1
BOLT,6X14 (Ref # 92150)	92150-1133	2
BOLT,6X16 (Ref # 92150A)	92150-1198	4
DAMPER,BATTERY (Ref # 92161)	92161-1097	1
DAMPER,BATTERY BAND (Ref # 92161A)	92161-1214	2
SCREW,6X10 (Ref # 92172)	92172-0005	2
NUT,CAP,6MM (Ref # 92210)	92210-0003	2
BAND,L=470 (Ref # 92072)	92072-1331	1

© 2026 Kawasaki Motors Corp., U.S.A.