2022 MULE PRO-MX™ EPS CAMO

PARTS DIAGRAM

Rear Suspension

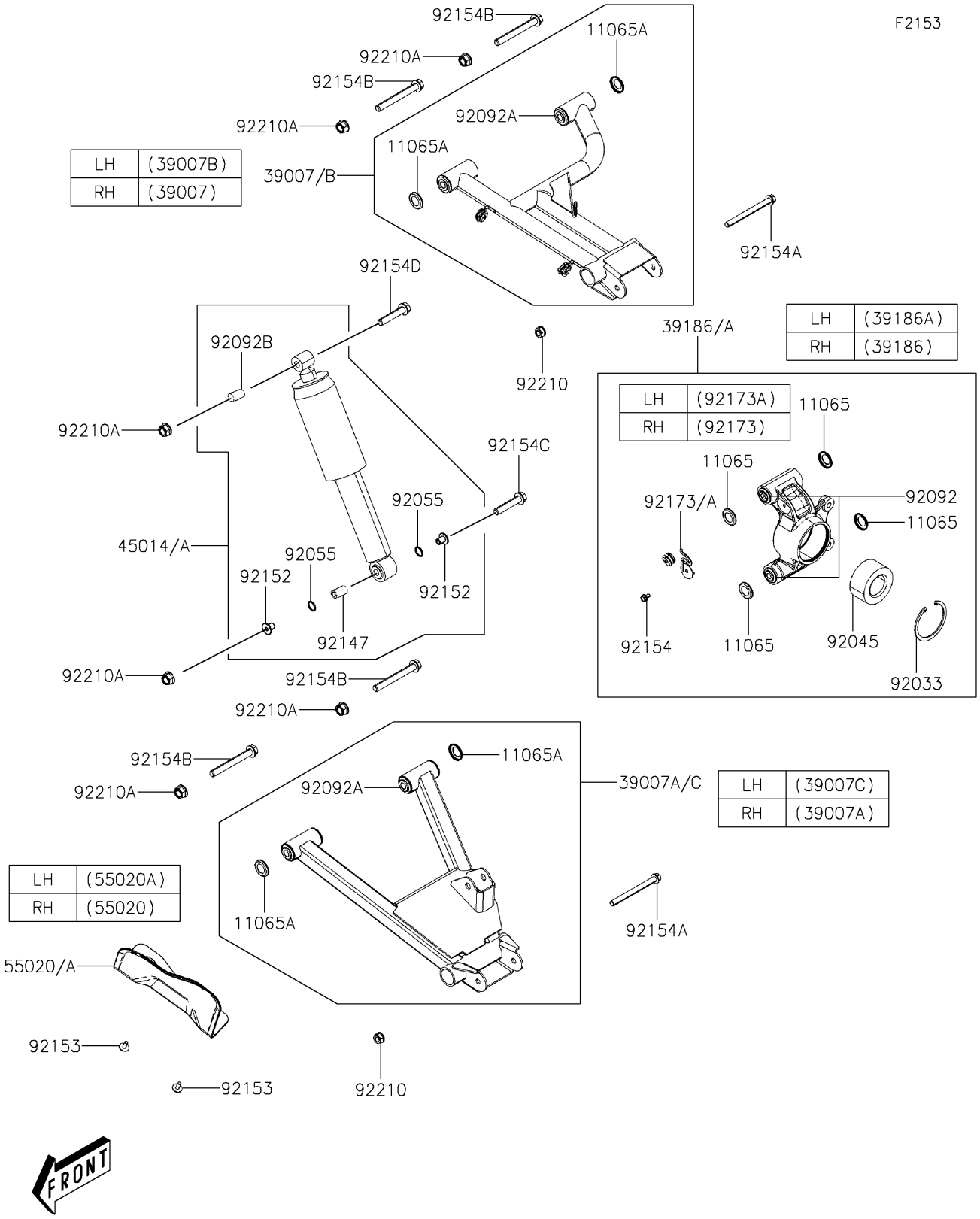

LH	(39007B)
RH	(39007)

LH	(39186A)
RH	(39186)

LH	(92173A)
RH	(92173)

LH	(39007C)
RH	(39007A)

LH	(55020A)
RH	(55020)

© 2026 Kawasaki Motors Corp., U.S.A.

2022 MULE PRO-MX™ EPS CAMO

PARTS LIST

Rear Suspension

ITEM NAME	PART NUMBER	QUANTITY

© 2026 Kawasaki Motors Corp., U.S.A.