2025 Mule PRO-MX EPS

PARTS DIAGRAM

Meter(s)

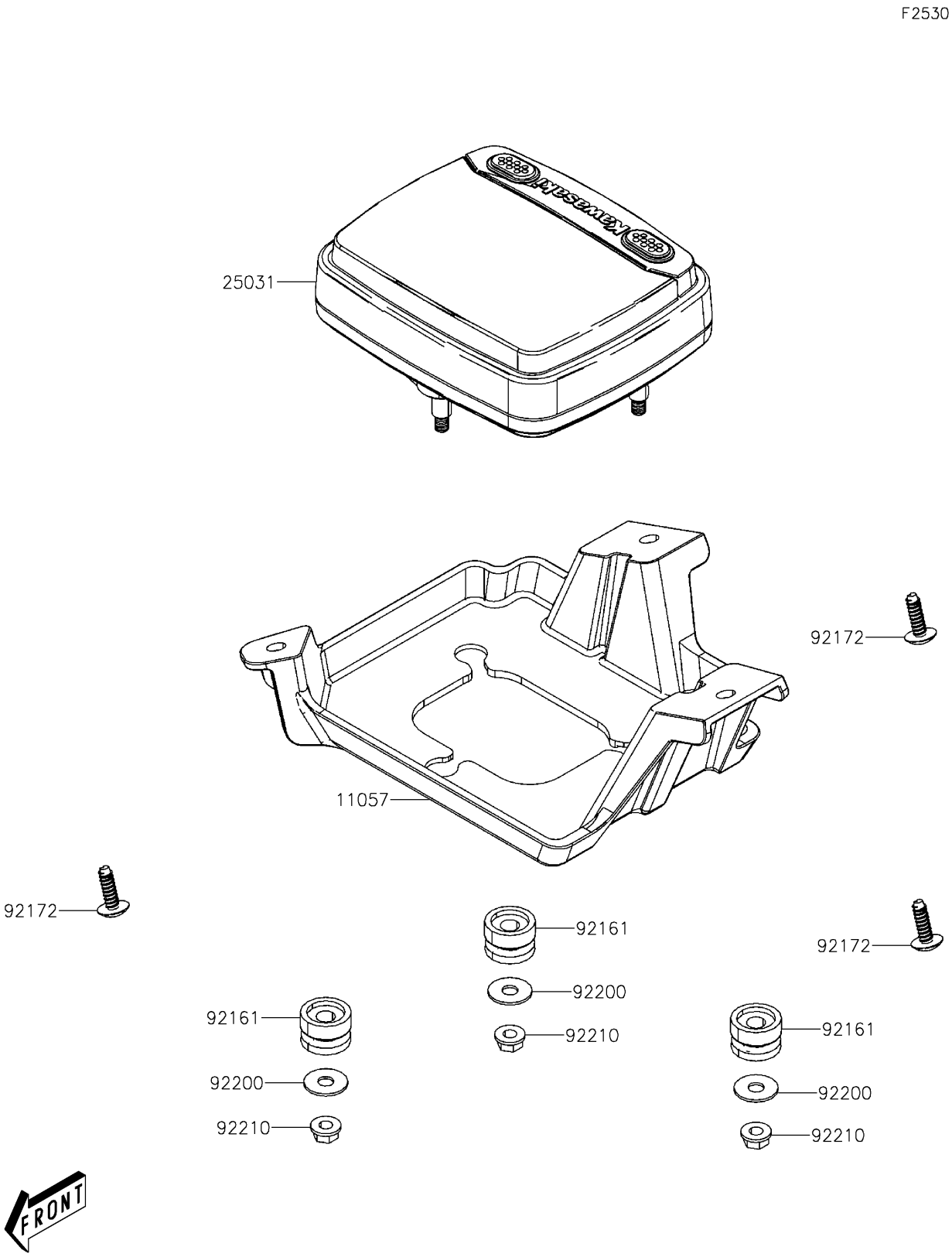

© 2026 Kawasaki Motors Corp., U.S.A.

2025 Mule PRO-MX EPS

PARTS LIST

Meter(s)

ITEM NAME	PART NUMBER	QUANTITY
BRACKET,METER (Ref # 11057)	11057-Y005	1
METER-ASSY (Ref # 25031)	25031-Y010	1
DAMPER (Ref # 92161)	92161-Y044	3
SCREW,TAPPING,5X16 (Ref # 92172)	92172-Y020	3
WASHER,6X16X1 (Ref # 92200)	92200-Y094	3
NUT,FLANGE,5MM (Ref # 92210)	92210-Y033	3

© 2026 Kawasaki Motors Corp., U.S.A.