2005 Vulcan 1600 Nomad

PARTS DIAGRAM

Left Engine Cover(s)

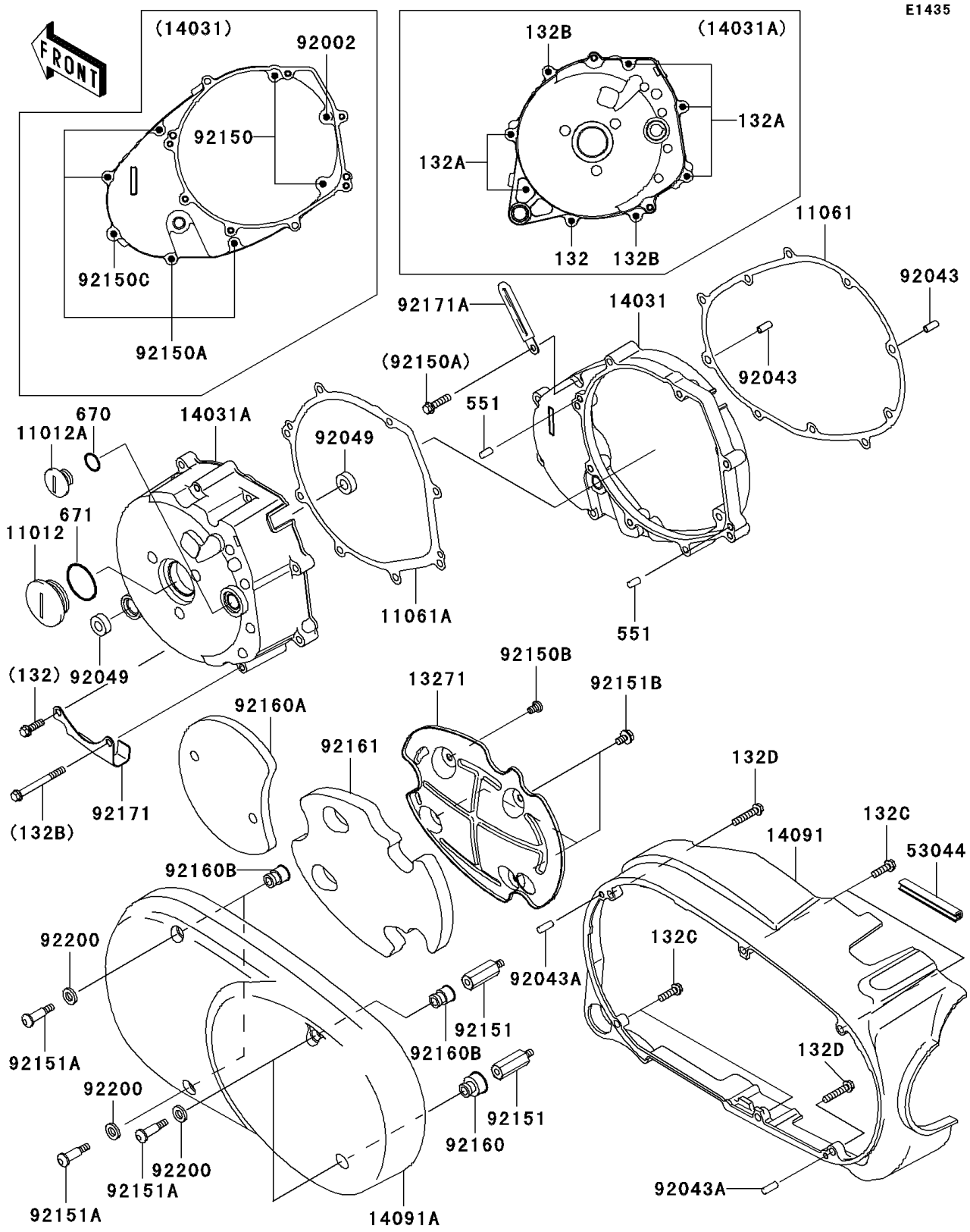

© 2026 Kawasaki Motors Corp., U.S.A.

2005 Vulcan 1600 Nomad

PARTS LIST

Left Engine Cover(s)

ITEM NAME	PART NUMBER	QUANTITY
BOLT-FLANGED-SMALL (Ref # 132)	132J0620	1
BOLT-FLANGED-SMALL (Ref # 132A)	132J0630	5
BOLT-FLANGED-SMALL (Ref # 132B)	132J0660	2
BOLT-FLANGED-SMALL (Ref # 132C)	132V0620	4
BOLT-FLANGED-SMALL (Ref # 132D)	132V0630	2
PIN-DOWEL,6X12 (Ref # 551)	551A0612	2
O RING,18MM (Ref # 670)	670B2018	1
O RING,40MM (Ref # 671)	671B2540	1
CAP (Ref # 11012)	11012-1362	1
CAP,TOP MARK (Ref # 11012A)	11012-1363	1
GASKET,GENERATOR COVER,IN (Ref # 11061)	11061-1079	1
GASKET,GENERATOR COVER,OUT (Ref # 11061A)	11061-1080	1
PLATE (Ref # 13271)	13271-1496	1
COVER-GENERATOR,INNNER (Ref # 14031)	14031-1348	1
COVER-GENERATOR,OUTER (Ref # 14031A)	14031-1349	1
COVER,LH,INNER (Ref # 14091)	14091-1206	1
COVER,LH,OUTER (Ref # 14091A)	14091-1297	1
TRIM (Ref # 53044)	53044-1312	1
BOLT,FLANGED,M6X40 (Ref # 92002)	92002-1566	1
PIN,6.2X8X14 (Ref # 92043)	92043-1263	2
PIN,6X16 (Ref # 92043A)	92043-1690	2
SEAL-OIL,VB13193 (Ref # 92049)	92049-1398	2
BOLT,6X30 (Ref # 92150)	92150-1021	2
BOLT,6X25 (Ref # 92150A)	92150-1779	4
BOLT,6X10 (Ref # 92150B)	92150-1864	1
BOLT,6X35 (Ref # 92150C)	92150-1967	1
BOLT (Ref # 92151)	92151-1062	2
BOLT,L=32 (Ref # 92151A)	92151-1796	4
BOLT,6X10 (Ref # 92151B)	92151-1884	3

© 2026 Kawasaki Motors Corp., U.S.A.

2005 Vulcan 1600 Nomad

PARTS LIST

Left Engine Cover(s)

ITEM NAME	PART NUMBER	QUANTITY
DAMPER (Ref # 92160)	92160-1718	1
DAMPER (Ref # 92160A)	92160-1719	1
DAMPER (Ref # 92160B)	92160-1730	3
DAMPER (Ref # 92161)	92161-1179	1
CLAMP,CLUCTH HOSE (Ref # 92171)	92171-0117	1
CLAMP (Ref # 92171A)	92171-0462	1
WASHER (Ref # 92200)	92200-1296	4

© 2026 Kawasaki Motors Corp., U.S.A.