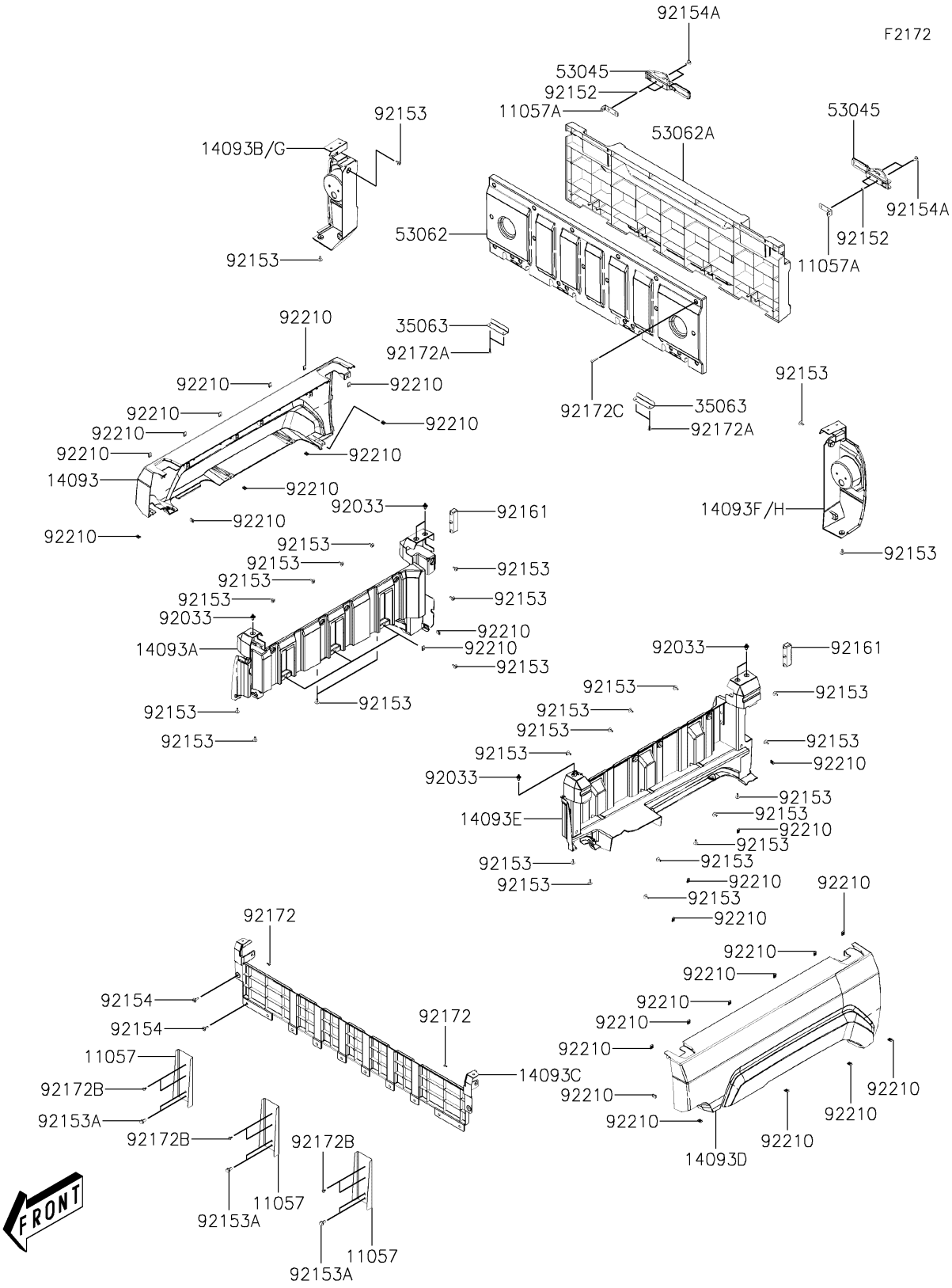
2022 MULE PRO-MX™

PARTS DIAGRAM

Rear Fender(s)


F2172
92154A
53045
92152
11057A
92153
14093B/G
53062A
53062
53045
92154A
92152
11057A
92153
92210
35063
92172A
92210
92210
92210
92210
92210
92210
14093
92210
92210
92033
92161
92153
92153
92153
92153
92153
92033
92210
14093A
92210
92153
92153
92153
92153
92153

2022 MULE PRO-MX™

PARTS LIST

Rear Fender(s)

ITEM NAME	PART NUMBER	QUANTITY
BRACKET,CARGO BED (Ref # 11057)	11057-Y016	3
BRACKET,STOPPER (Ref # 11057A)	11057-Y018	2
COVER,SIDE,OUTER,RH,S.BLACK (Ref # 14093)	14093-Y031-933	1
COVER,SIDE,INNER,RH,S.BLACK (Ref # 14093A)	14093-Y032-933	1
COVER,TAIL LIGHT,RH,S.BLACK (Ref # 14093B)	14093-Y033-933	1
COVER,FRONT CARRIER (Ref # 14093C)	14093-Y034	1
COVER,SIDE,OUTER,LH,S.BLACK (Ref # 14093D)	14093-Y035-933	1
COVER,SIDE,INNER,LH,S.BLACK (Ref # 14093E)	14093-Y036-933	1
COVER,TAIL LIGHT,LH,S.BLACK (Ref # 14093F)	14093-Y037-933	1
STAY,HINGE (Ref # 35063)	35063-Y044	2
HOOK-ASSY (Ref # 53045)	53045-Y002	2
GATE-TAIL,INNER (Ref # 53062)	53062-Y002	1
GATE-TAIL,OUTER,S.BLACK (Ref # 53062A)	53062-Y003-933	1
RING-SNAP (Ref # 92033)	92033-Y033	6
COLLAR,TAIL GATE (Ref # 92152)	92152-Y075	4
BOLT,5X16 (Ref # 92153)	92153-Y013	30
BOLT,FLANGE,8X16 (Ref # 92153A)	92153-Y032	6
BOLT,6X18 (Ref # 92154)	92154-Y177	12
BOLT,6X20 (Ref # 92154A)	92154-Y227	4
DAMPER (Ref # 92161)	92161-Y053	2
SCREW,4X12 (Ref # 92172)	92172-Y019	2
SCREW,TAPPING,5X16 (Ref # 92172A)	92172-Y020	4
SCREW,TAPPING,5X12 (Ref # 92172B)	92172-Y038	6
SCREW,TAPPING,5X30 (Ref # 92172C)	92172-Y083	22
NUT,5MM (Ref # 92210)	92210-Y016	30

© 2026 Kawasaki Motors Corp., U.S.A.