2021 MULE PRO-MX™

PARTS DIAGRAM

Front Suspension

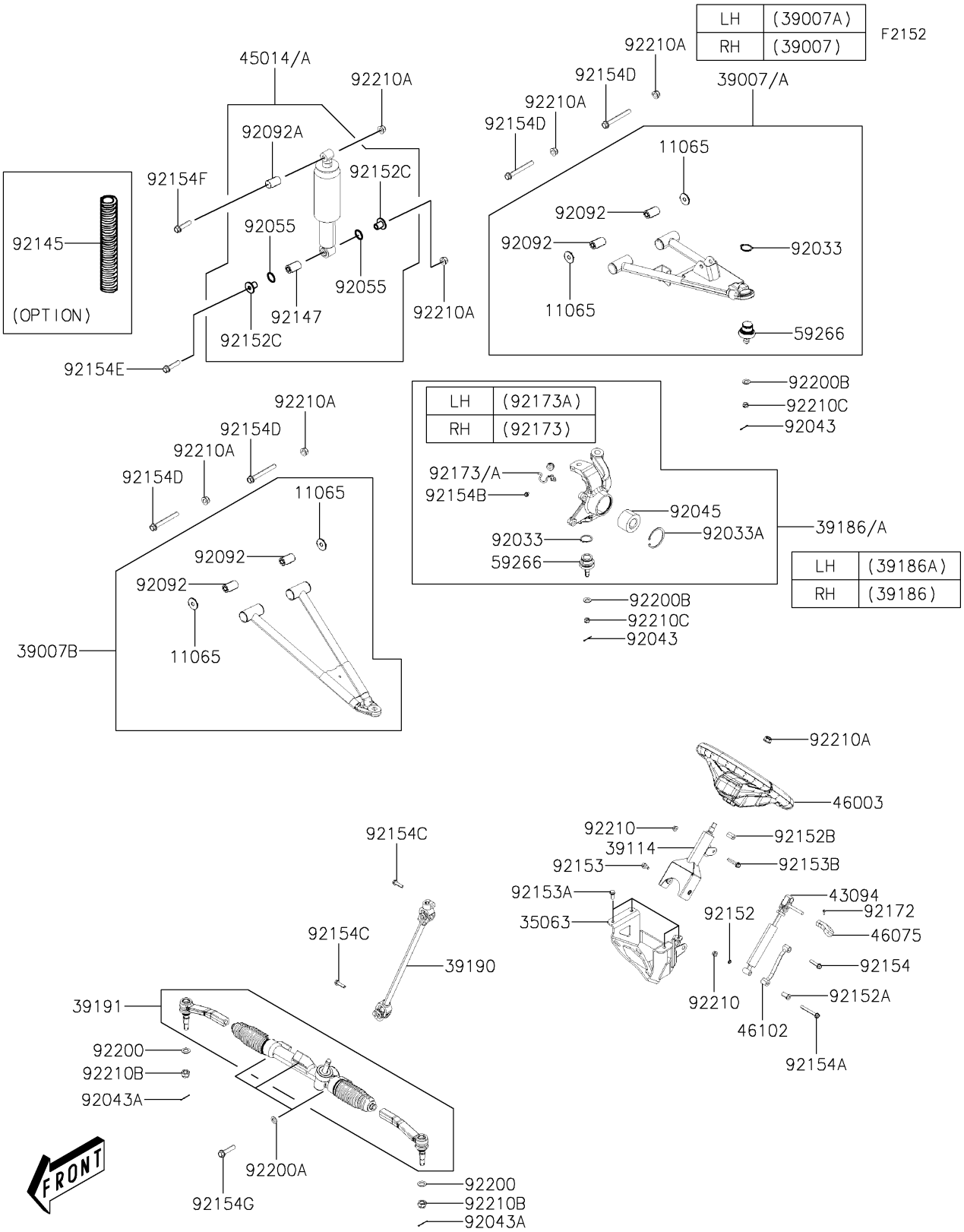

© 2026 Kawasaki Motors Corp., U.S.A.

2021 MULE PRO-MX™

PARTS LIST

Front Suspension

ITEM NAME	PART NUMBER	QUANTITY

© 2026 Kawasaki Motors Corp., U.S.A.