2021 MULE PRO-MX™ EPS CAMO

PARTS DIAGRAM

Seat

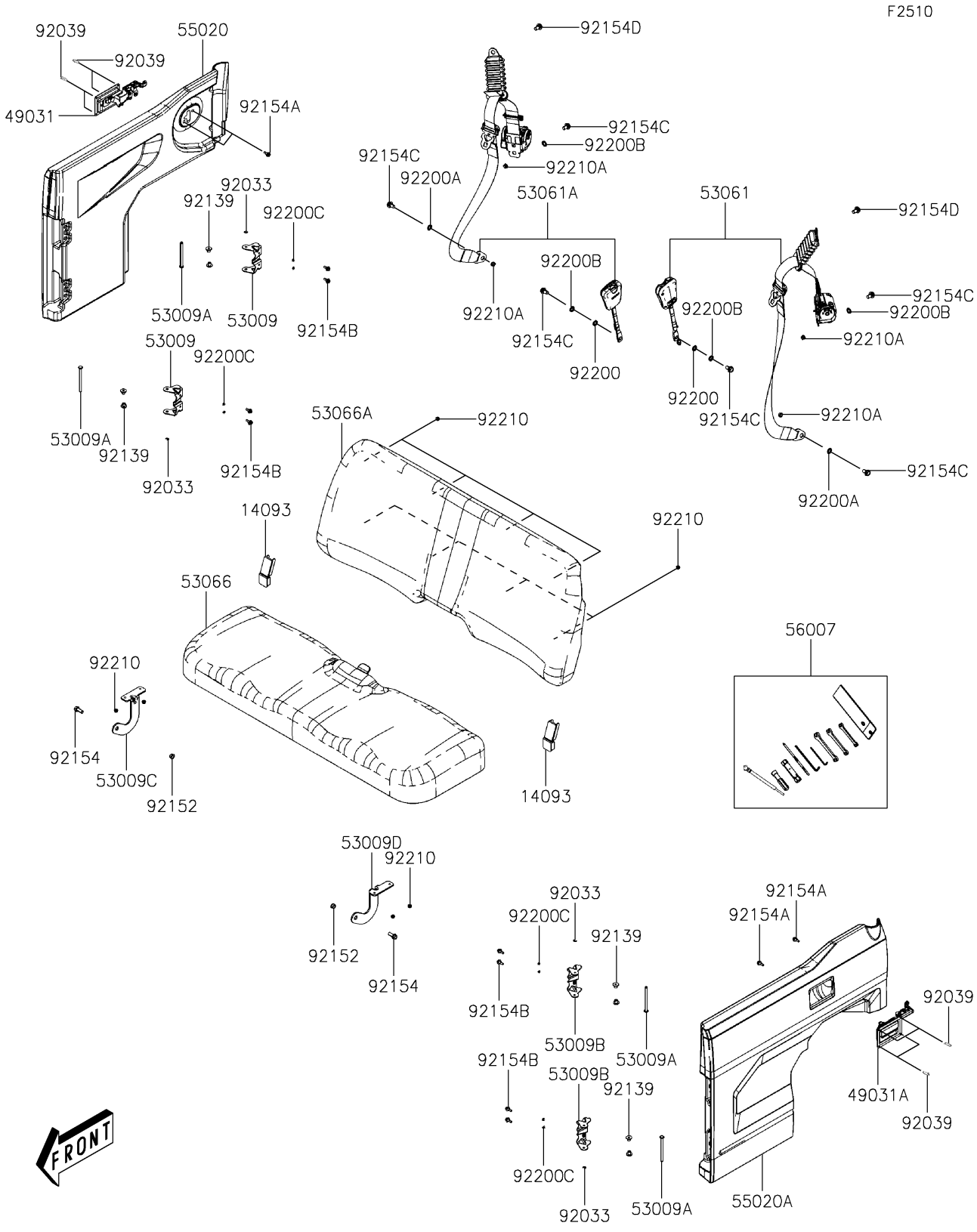

© 2026 Kawasaki Motors Corp., U.S.A.

2021 MULE PRO-MX™ EPS CAMO

PARTS LIST

Seat

ITEM NAME	PART NUMBER	QUANTITY
COVER,SEAT (Ref # 14093)	14093-Y028	2
LATCH,RH (Ref # 49031)	49031-Y001	1
LATCH,LH (Ref # 49031A)	49031-Y002	1
HINGE,RH (Ref # 53009)	53009-Y002	2
HINGE (Ref # 53009A)	53009-Y003	4
HINGE,LH (Ref # 53009B)	53009-Y004	2
HINGE,SEAT,RH (Ref # 53009C)	53009-Y005	1
HINGE,SEAT,LH (Ref # 53009D)	53009-Y006	1
BELT-SEAT,LH (Ref # 53061)	53061-Y001	1
BELT-SEAT,RH (Ref # 53061A)	53061-Y002	1
SEAT-ASSY,BOTTOM (Ref # 53066)	53066-Y006	1
SEAT-ASSY,BACK (Ref # 53066A)	53066-Y008	1
GUARD,RH,S.BLACK (Ref # 55020)	55020-Y020-933	1
GUARD,LH,S.BLACK (Ref # 55020A)	55020-Y021-933	1
TOOL-KIT (Ref # 56007)	56007-Y005	1
RING-SNAP (Ref # 92033)	92033-Y040	4
RIVET,4.8X12.8 (Ref # 92039)	92039-Y005	8
BUSHING (Ref # 92139)	92139-Y014	8
COLLAR (Ref # 92152)	92152-Y066	2
BOLT,FLANGE,10X25 (Ref # 92154)	92154-Y139	2
BOLT,FLANGE,6X14 (Ref # 92154A)	92154-Y153	4
BOLT,FLANGE,6X18 (Ref # 92154B)	92154-Y154	8
BOLT (Ref # 92154C)	92154-Y170	6
BOLT (Ref # 92154D)	92154-Y171	2
WASHER,12MM (Ref # 92200)	92200-Y003	2
WASHER,THRUST,12X30X1 (Ref # 92200A)	92200-Y075	2
WASHER,12MM (Ref # 92200B)	92200-Y096	4
WASHER,DOOR (Ref # 92200C)	92200-Y105	8
NUT,6MM (Ref # 92210)	92210-Y026	12

© 2026 Kawasaki Motors Corp., U.S.A.

2021 MULE PRO-MX™ EPS CAMO

PARTS LIST

Seat

ITEM NAME	PART NUMBER	QUANTITY
NUT (Ref # 92210A)	92210-Y081	4

© 2026 Kawasaki Motors Corp., U.S.A.