2020 MULE PRO-MX™ EPS CAMO

Kawasaki
Let the Good Times Roll®

PARTS DIAGRAM

Guards/Cab Frame(DKF)

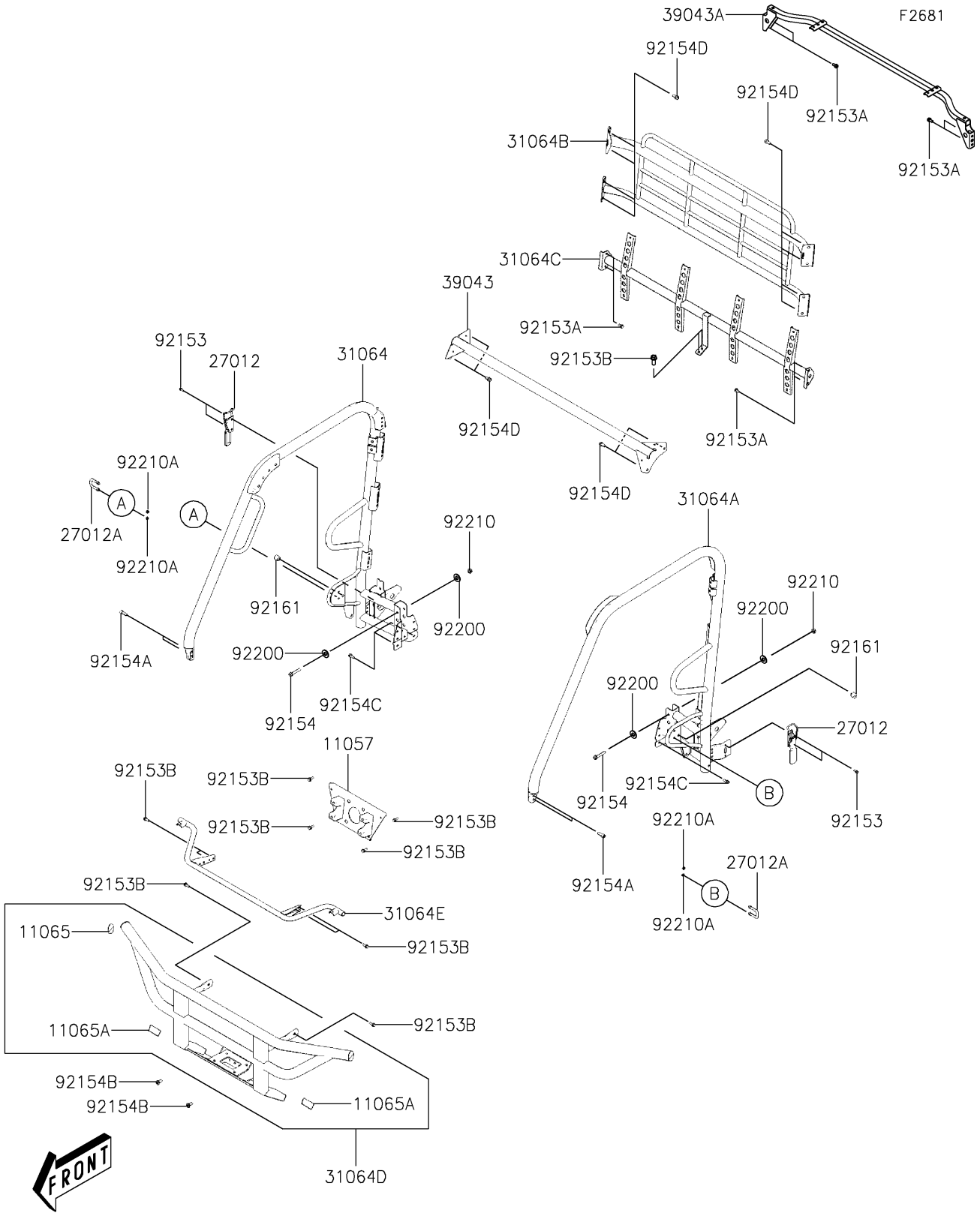

© 2026 Kawasaki Motors Corp., U.S.A.

2020 MULE PRO-MX™ EPS CAMO

PARTS LIST

Guards/Cab Frame(DKF)

ITEM NAME	PART NUMBER	QUANTITY

© 2026 Kawasaki Motors Corp., U.S.A.