2020 MULE PRO-MX™ EPS LE

PARTS DIAGRAM

Seat(CKF)

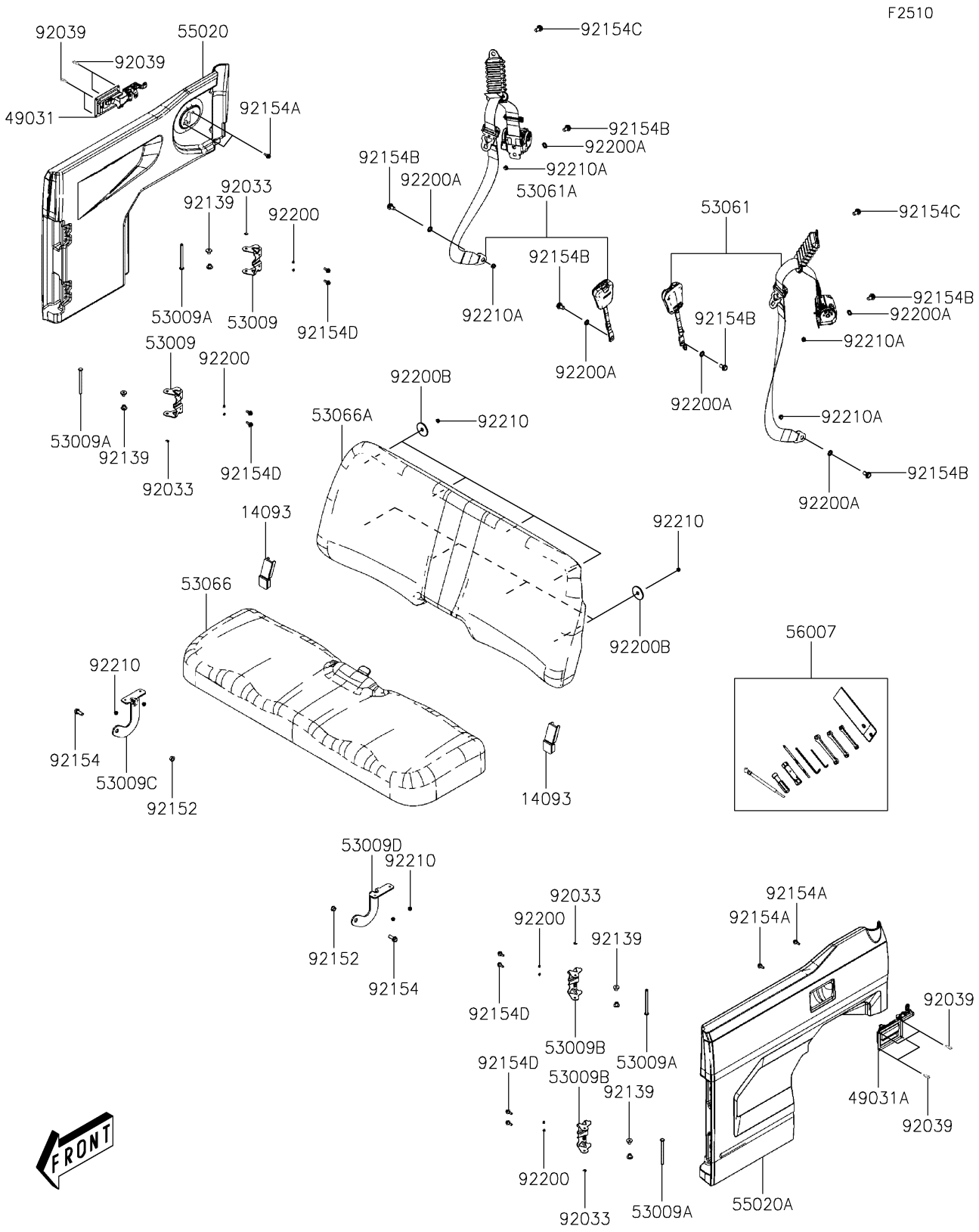

© 2026 Kawasaki Motors Corp., U.S.A.

2020 MULE PRO-MX™ EPS LE

PARTS LIST

Seat(CKF)

ITEM NAME	PART NUMBER	QUANTITY

© 2026 Kawasaki Motors Corp., U.S.A.