2022 Z900RS SE

PARTS DIAGRAM

Decals(NNFNN-NRFNL)

F2861

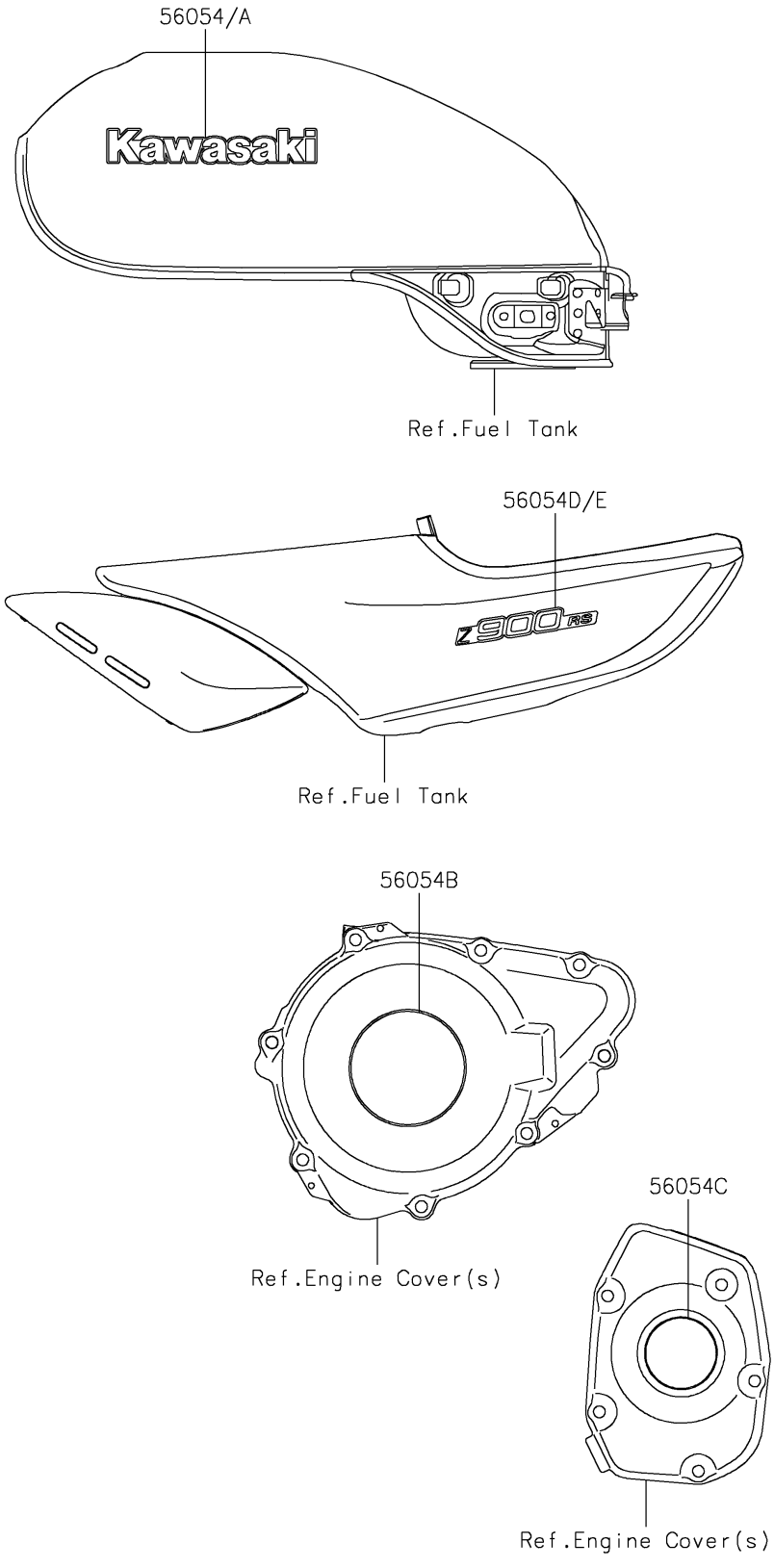

© 2026 Kawasaki Motors Corp., U.S.A.

2022 Z900RS SE

PARTS LIST

Decals(NNFNN-NRFNL)

ITEM NAME	PART NUMBER	QUANTITY
MARK,FUEL TANK,LH,KAWASAKI,3D (Ref # 56054)	56054-2282	1
MARK,FUEL TANK,RH,KAWASAKI,3D (Ref # 56054A)	56054-2283	1
MARK,GENERATOR COVER (Ref # 56054B)	56054-2379	1
MARK,PULSAR COVER (Ref # 56054C)	56054-2380	1
MARK,SIDE COVER,LH,Z900RS,3D (Ref # 56054D)	56054-2910	1
MARK,SIDE COVER,RH,Z900RS,3D (Ref # 56054E)	56054-2911	1

© 2026 Kawasaki Motors Corp., U.S.A.