2022 Z900RS SE

PARTS DIAGRAM

Generator

E1810

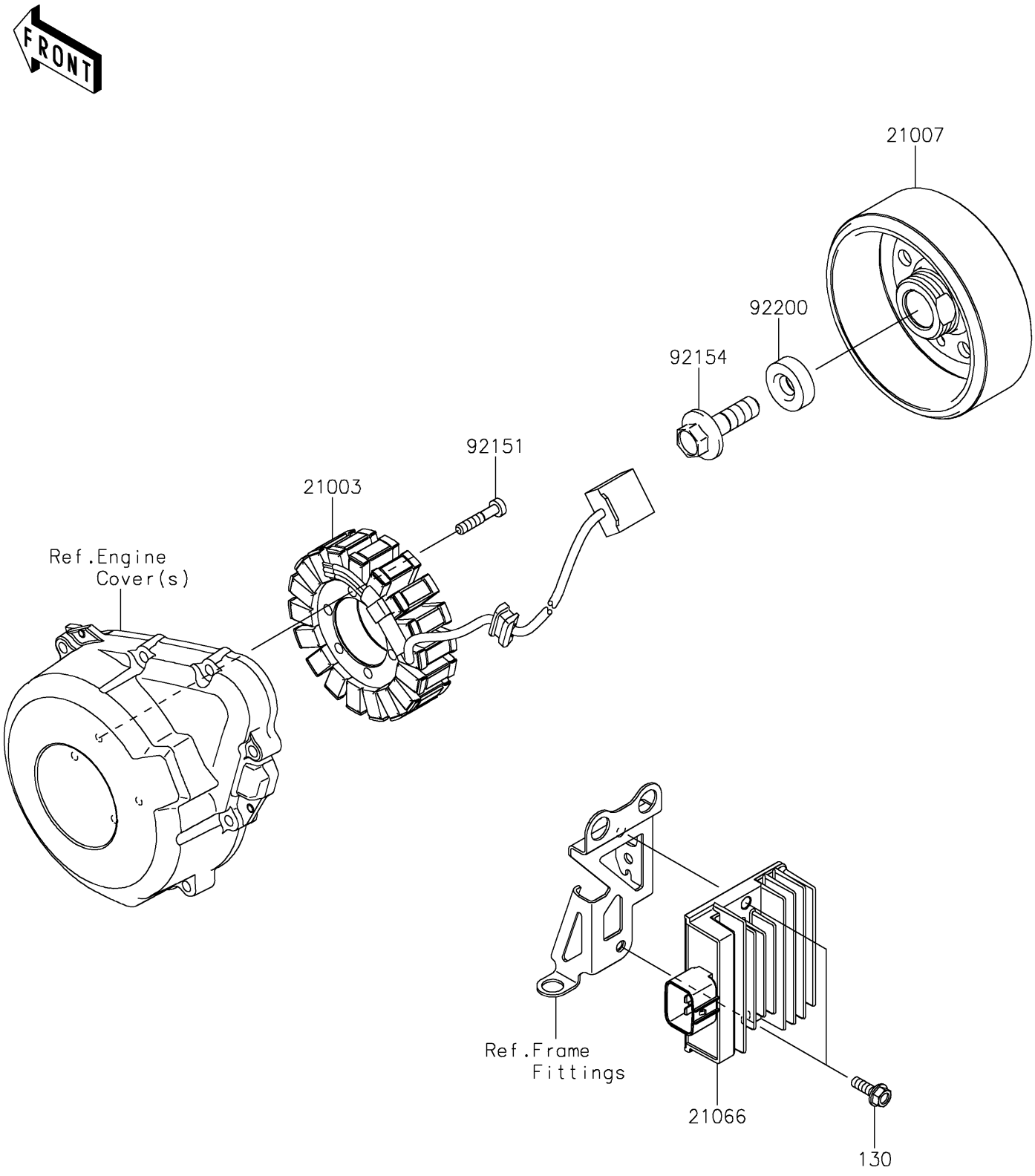

© 2026 Kawasaki Motors Corp., U.S.A.

2022 Z900RS SE

PARTS LIST

Generator

ITEM NAME	PART NUMBER	QUANTITY
STATOR (Ref # 21003)	21003-0179	1
ROTOR (Ref # 21007)	21007-0654	1
REGULATOR-VOLTAGE (Ref # 21066)	21066-0760	1
BOLT,6X30 (Ref # 92151)	92151-1626	4
BOLT,FLANGED,12X40 (Ref # 92154)	92154-2650	1
WASHER,12X34X9 (Ref # 92200)	92200-0369	1
BOLT-FLANGED,6X18 (Ref # 130)	130CA0618	2

© 2026 Kawasaki Motors Corp., U.S.A.