2021 Z900RS CAFE

PARTS DIAGRAM

Seat

F2510

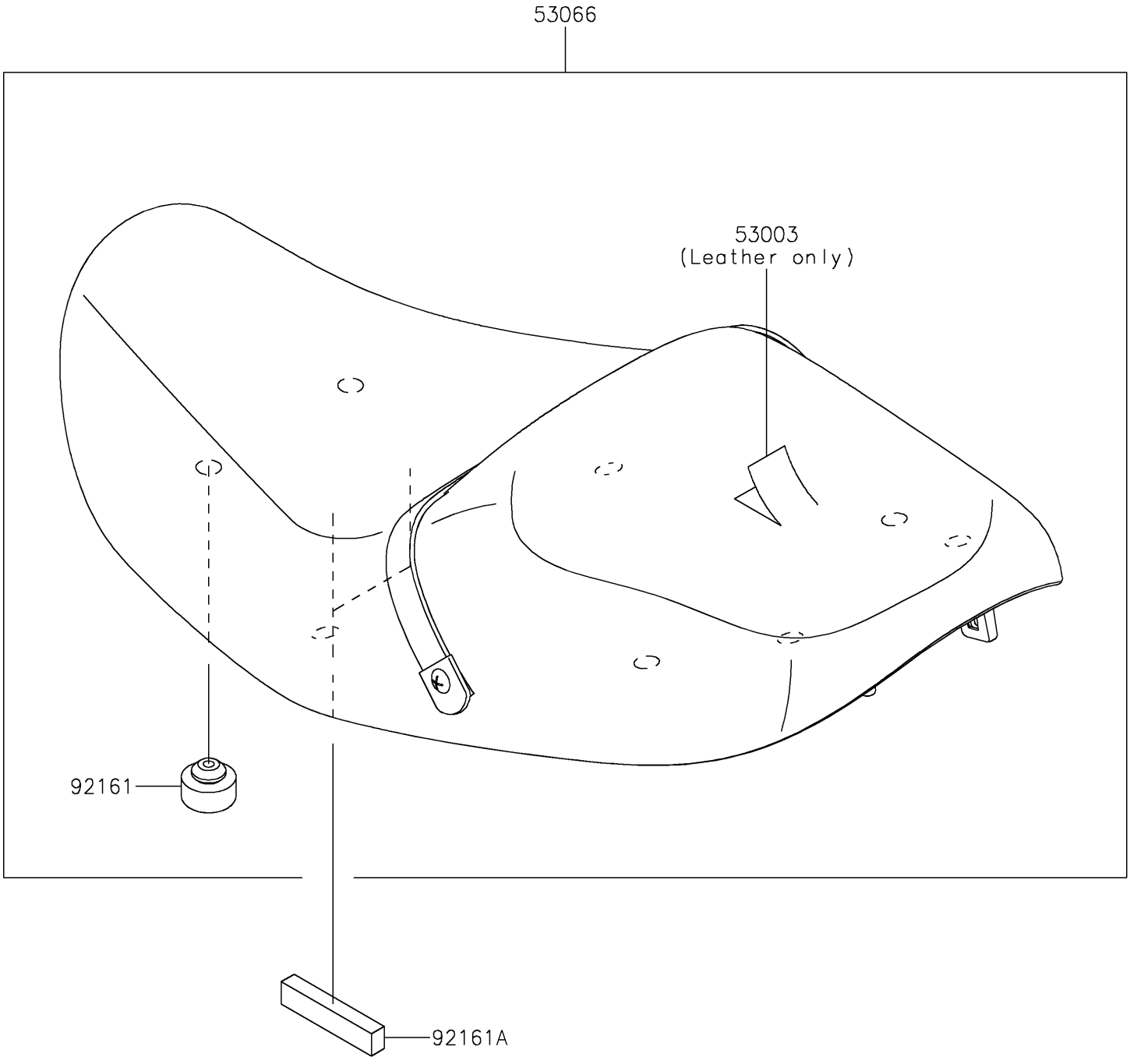

© 2026 Kawasaki Motors Corp., U.S.A.

2021 Z900RS CAFE

PARTS LIST

Seat

ITEM NAME	PART NUMBER	QUANTITY
LEATHER,BLACK (Ref # 53003)	53003-0465-MA	1
SEAT-ASSY,BLACK+BLK (Ref # 53066)	53066-0599-12Y	1
DAMPER,SEAT (Ref # 92161)	92161-0930	8
DAMPER,10X70X15 (Ref # 92161A)	92161-2132	2

© 2026 Kawasaki Motors Corp., U.S.A.