2021 Z900RS CAFE

PARTS DIAGRAM

Stand(s)

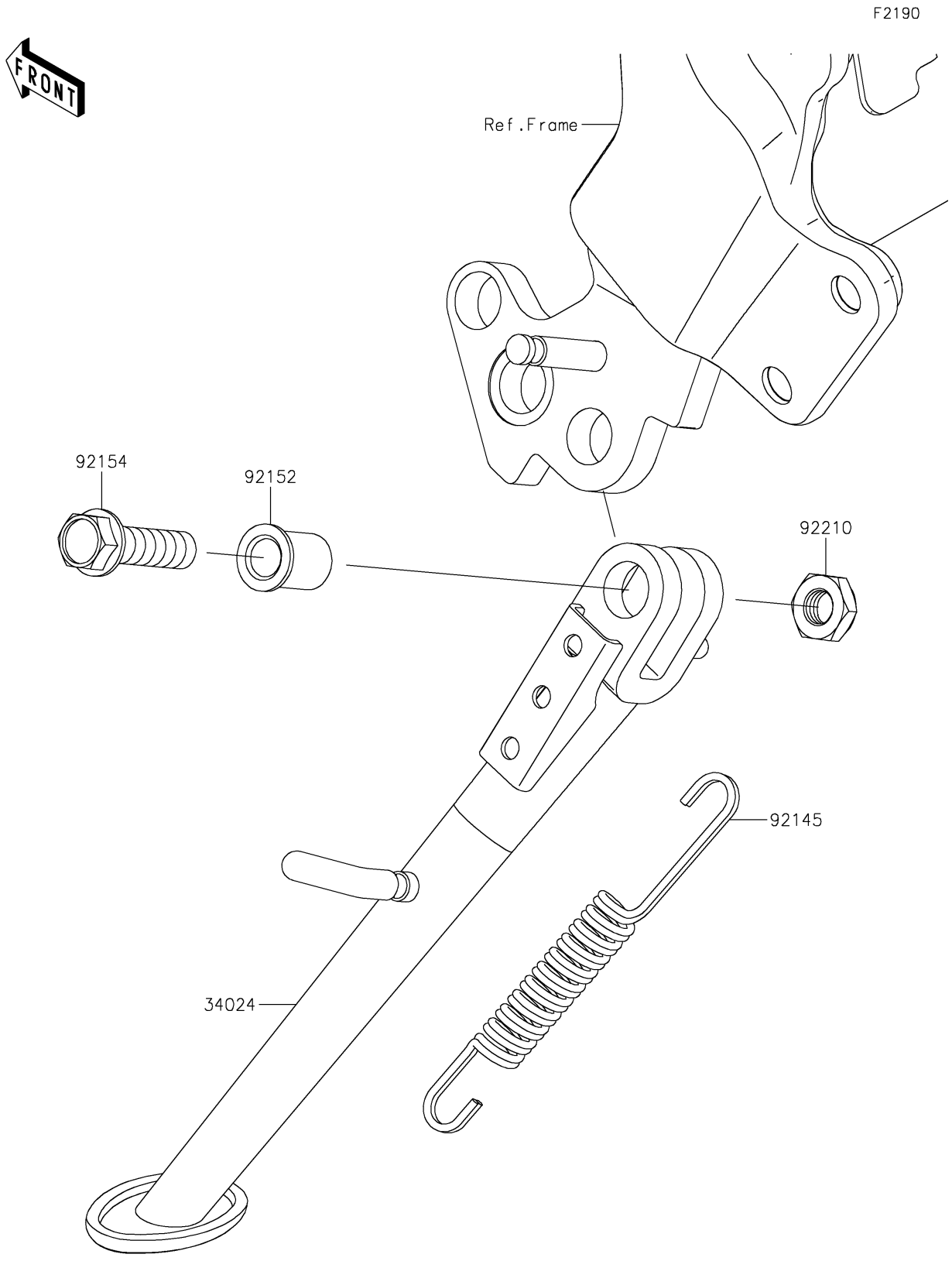

© 2026 Kawasaki Motors Corp., U.S.A.

2021 Z900RS CAFE

PARTS LIST

Stand(s)

ITEM NAME	PART NUMBER	QUANTITY
STAND-SIDE,F.S.BLACK (Ref # 34024)	34024-0151-18R	1
SPRING,SIDE STAND (Ref # 92145)	92145-0562	1
COLLAR,10.2X15X20.1 (Ref # 92152)	92152-1828	1
BOLT,FLANGED,10X37 (Ref # 92154)	92154-2848	1
NUT,LOCK,10MM (Ref # 92210)	92210-1184	1

© 2026 Kawasaki Motors Corp., U.S.A.