2021 Z900RS CAFE

PARTS DIAGRAM

Crankshaft

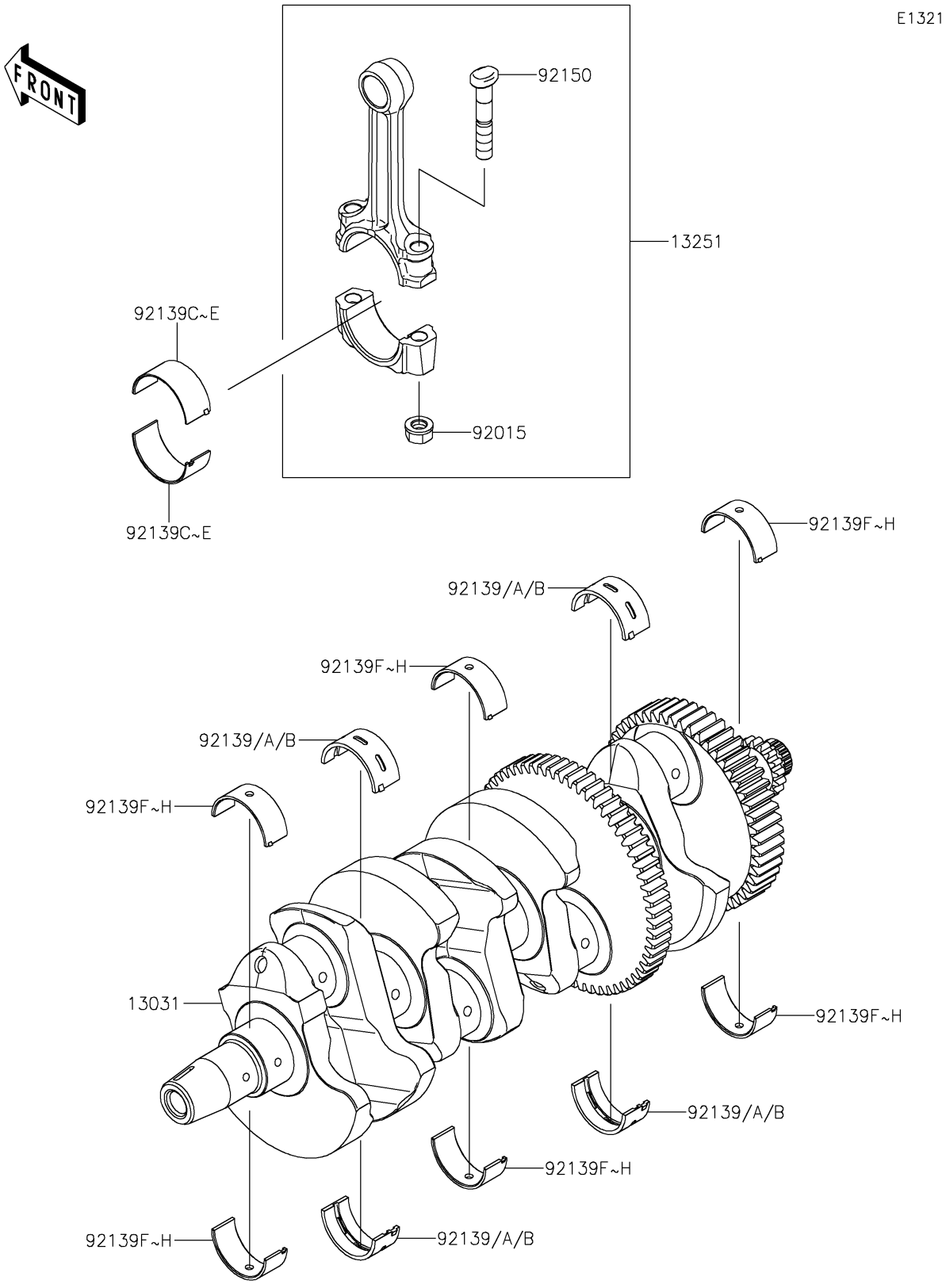

© 2026 Kawasaki Motors Corp., U.S.A.

2021 Z900RS CAFE

PARTS LIST

Crankshaft

ITEM NAME	PART NUMBER	QUANTITY
CRANKSHAFT-COMP (Ref # 13031)	13031-0710	1
ROD-ASSY-CONNECTING,HH (Ref # 13251)	13251-0761-HH	4
NUT,FLANGED,8MM (Ref # 92015)	92015-1311	8
BUSHING,CRANK #2&#4,BLUE (Ref # 92139)	92139-0032	AR
BUSHING,CRANK #2&#4,BLACK (Ref # 92139A)	92139-0033	4
BUSHING,CRANK #2&#4,BROWN (Ref # 92139B)	92139-0034	AR
BUSHING,CRANK PIN,BLUE (Ref # 92139C)	92139-0122	AR
BUSHING,CRANK PIN,BLACK (Ref # 92139D)	92139-0123	8
BUSHING,CRANK PIN,BROWN (Ref # 92139E)	92139-0124	AR
BUSHING,CRANK,#1&#3&#5,BLUE (Ref # 92139F)	92139-0217	AR
BUSHING,CRANK,#1&#3&#5,BLACK (Ref # 92139G)	92139-0218	6
BUSHING,CRANK,#1&#3&#5,BROWN (Ref # 92139H)	92139-0219	AR
BOLT,CONNECTING ROD,8MM (Ref # 92150)	92150-1216	8

© 2026 Kawasaki Motors Corp., U.S.A.