2021 Z900RS CAFE

PARTS DIAGRAM

Cylinder/Piston(s)

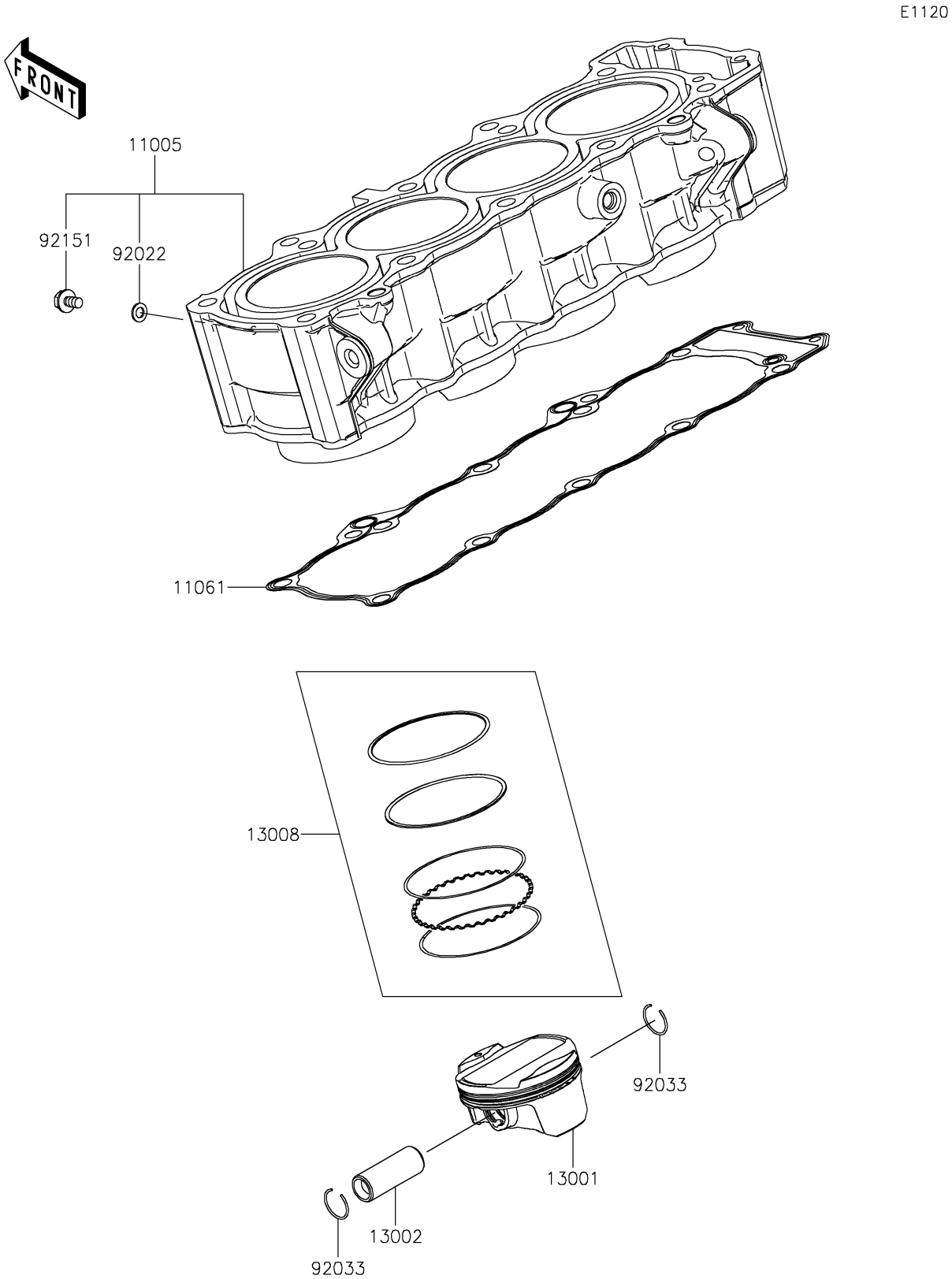

© 2026 Kawasaki Motors Corp., U.S.A.

2021 Z900RS CAFE

PARTS LIST

Cylinder/Piston(s)

ITEM NAME	PART NUMBER	QUANTITY
CYLINDER-ENGINE (Ref # 11005)	11005-0686	1
GASKET,CYLINDER BASE (Ref # 11061)	11061-0402	1
PISTON-ENGINE (Ref # 13001)	13001-0788	4
PIN-PISTON (Ref # 13002)	13002-0004	4
RING-SET-PISTON (Ref # 13008)	13008-0571	4
WASHER,6.2X11X1 (Ref # 92022)	92022-304	1
RING-SNAP (Ref # 92033)	92033-1054	8
BOLT,6X10 (Ref # 92151)	92151-1344	1

© 2026 Kawasaki Motors Corp., U.S.A.