2005 Vulcan 1600 Classic

PARTS DIAGRAM

Fuel Injection

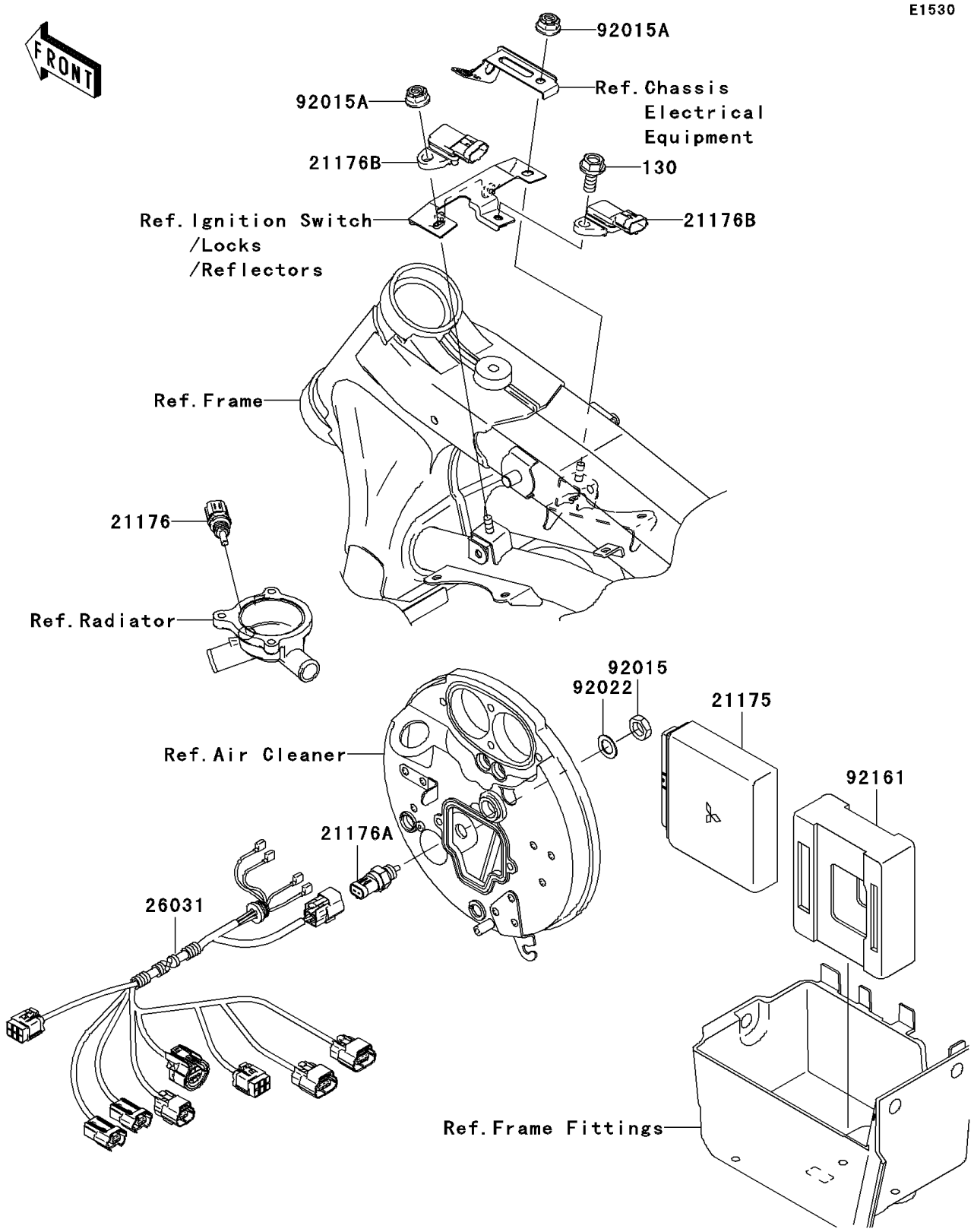

© 2026 Kawasaki Motors Corp., U.S.A.

2005 Vulcan 1600 Classic

PARTS LIST

Fuel Injection

ITEM NAME	PART NUMBER	QUANTITY
BOLT-FLANGED,M6X14 (Ref # 130)	130L0614	1
CONTROL UNIT-ELECTRONIC (Ref # 21175)	21175-1099	1
SENSOR,WATER TEMPERATURE (Ref # 21176)	21176-1085	1
SENSOR,AIR TEMPERATURE (Ref # 21176A)	21176-1086	1
SENSOR (Ref # 21176B)	21176-1118	2
HARNESS (Ref # 26031)	26031-0069	1
NUT,12MM (Ref # 92015)	92015-1395	1
NUT,LOCK,FLANGED,6MM (Ref # 92015A)	92015-1603	2
WASHER,12.3X20X0.5 (Ref # 92022)	92022-269	1
DAMPER (Ref # 92161)	92161-1210	1

© 2026 Kawasaki Motors Corp., U.S.A.