2020 Z900RS ABS

PARTS DIAGRAM

Oil Pump/Oil Filter

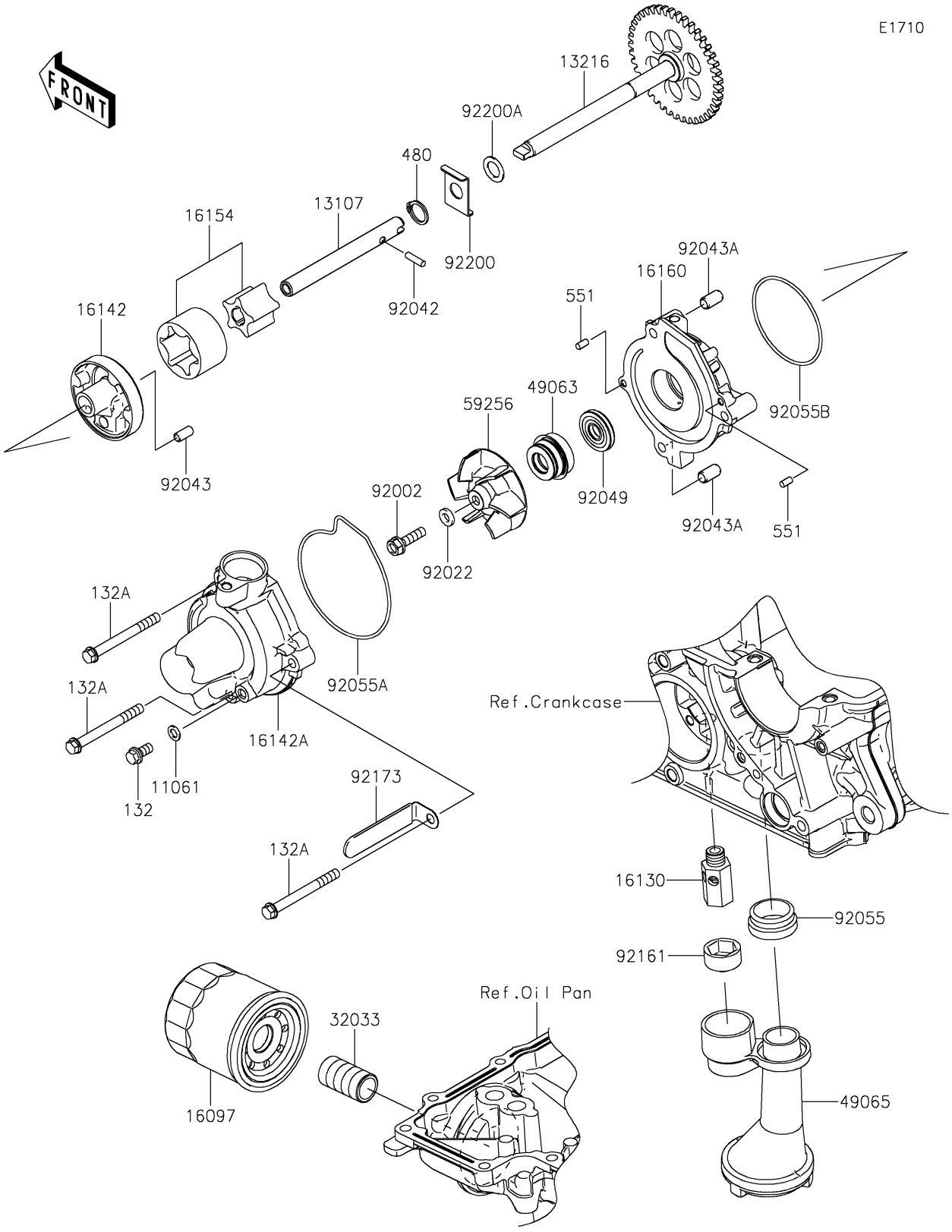

© 2026 Kawasaki Motors Corp., U.S.A.

2020 Z900RS ABS

PARTS LIST

Oil Pump/Oil Filter

ITEM NAME	PART NUMBER	QUANTITY
GASKET (Ref # 11061)	11061-0107	1
SHAFT (Ref # 13107)	13107-0214	1
GEAR-COMP,OIL PUMP,41T (Ref # 13216)	13216-0020	1
FILTER-ASSY-OIL (Ref # 16097)	16097-0008	1
VALVE-ASSY-RELIEF (Ref # 16130)	16130-1058	1
COVER-PUMP (Ref # 16142)	16142-0064	1
COVER-PUMP (Ref # 16142A)	16142-0746	1
ROTOR-PUMP (Ref # 16154)	16154-0057	1
BODY (Ref # 16160)	16160-0796	1
PIPE,OIL FILTER (Ref # 32033)	32033-1535	1
SEAL-MECHANICAL,WATER (Ref # 49063)	49063-1055	1
FILTER-OIL (Ref # 49065)	49065-0026	1
IMPELLER (Ref # 59256)	59256-0555	1
BOLT,6X22 (Ref # 92002)	92002-1154	1
WASHER,6.1X12X1 (Ref # 92022)	92022-077	1
PIN,DOWEL,4X13.8 (Ref # 92042)	92042-030	1
PIN,4.2X6X12 (Ref # 92043)	92043-1262	1
PIN,6.2X8X14 (Ref # 92043A)	92043-1263	2
SEAL-OIL (Ref # 92049)	92049-0798	1
RING-O,OIL FILTER (Ref # 92055)	92055-1503	1
RING-O,WATER PUMP COVER (Ref # 92055A)	92055-1571	1
RING-O,59.6X2.4 (Ref # 92055B)	92055-3018	1
DAMPER (Ref # 92161)	92161-0070	1
CLAMP (Ref # 92173)	92173-1201	1
WASHER (Ref # 92200)	92200-0410	1
WASHER (Ref # 92200A)	92200-1009	1
BOLT-FLANGED-SMALL,6X12 (Ref # 132)	132BA0612	1
BOLT-FLANGED-SMALL,6X60 (Ref # 132A)	132BC0660	3
CIRCLIP-TYPE-C,11MM (Ref # 480)	480J1100	1

© 2026 Kawasaki Motors Corp., U.S.A.

2020 Z900RS ABS

PARTS LIST

Oil Pump/Oil Filter

ITEM NAME	PART NUMBER	QUANTITY
PIN-DOWEL,4X8 (Ref # 551)	551A0408	2

© 2026 Kawasaki Motors Corp., U.S.A.