2020 Z900RS ABS

PARTS DIAGRAM

Balancer

E1323

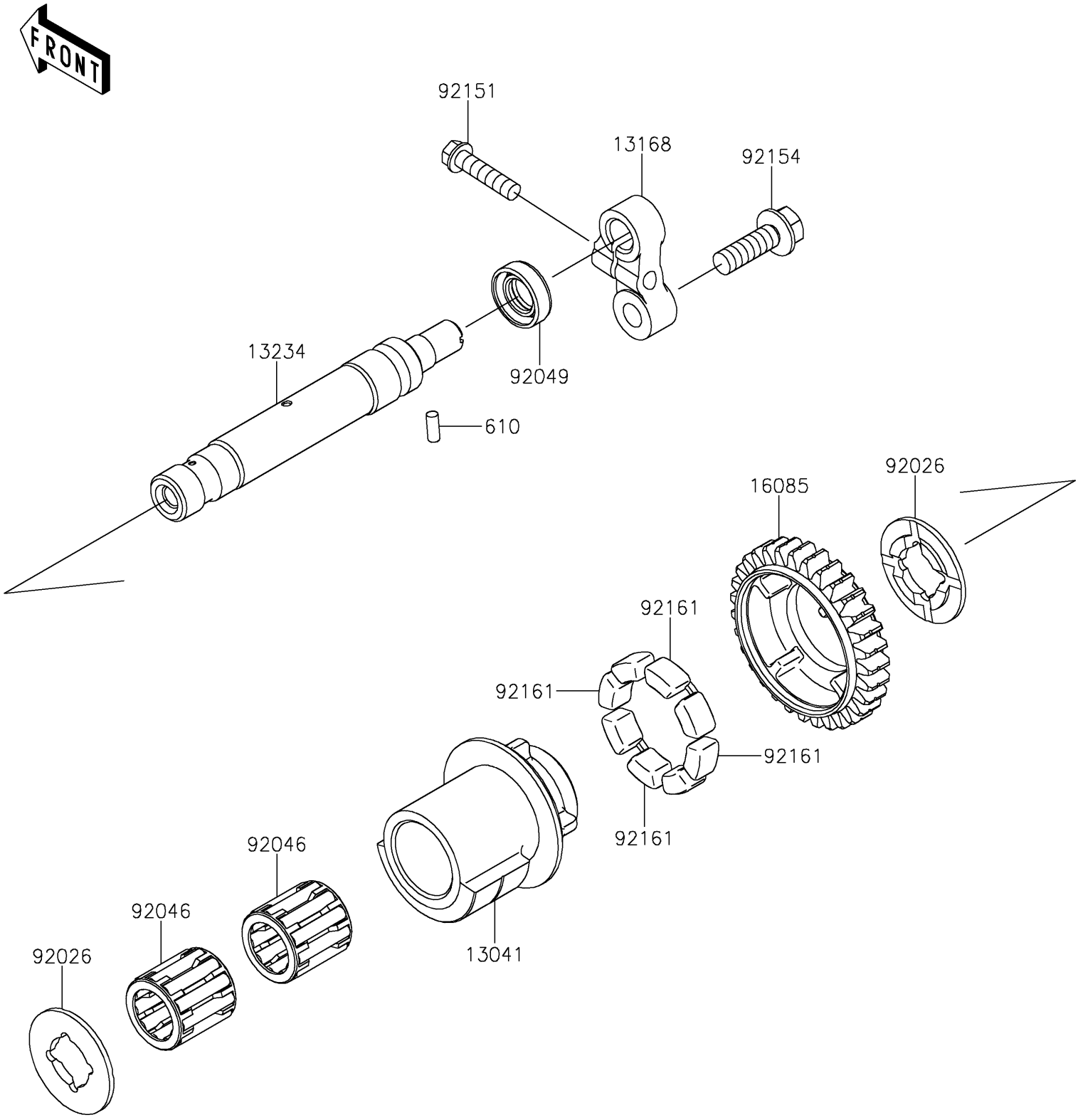

© 2026 Kawasaki Motors Corp., U.S.A.

2020 Z900RS ABS

PARTS LIST

Balancer

ITEM NAME	PART NUMBER	QUANTITY
BALANCER (Ref # 13041)	13041-0559	1
LEVER (Ref # 13168)	13168-0115	1
SHAFT-COMP (Ref # 13234)	13234-0038	1
GEAR,BALANCER,31T (Ref # 16085)	16085-0134	1
SPACER (Ref # 92026)	92026-0082	2
BEARING-NEEDLE (Ref # 92046)	92046-1266	2
SEAL-OIL,TC 12X22X7 (Ref # 92049)	92049-2204	1
BOLT,FLANGED-SMALL,6X25 (Ref # 92151)	92151-1930	1
BOLT,FLANGED,8X25 (Ref # 92154)	92154-0413	1
DAMPER (Ref # 92161)	92161-1055	4
ROLLER,4X10 (Ref # 610)	610A0410	1

© 2026 Kawasaki Motors Corp., U.S.A.