2026 JET SKI® STX® 160LX

PARTS DIAGRAM

Oil Pump

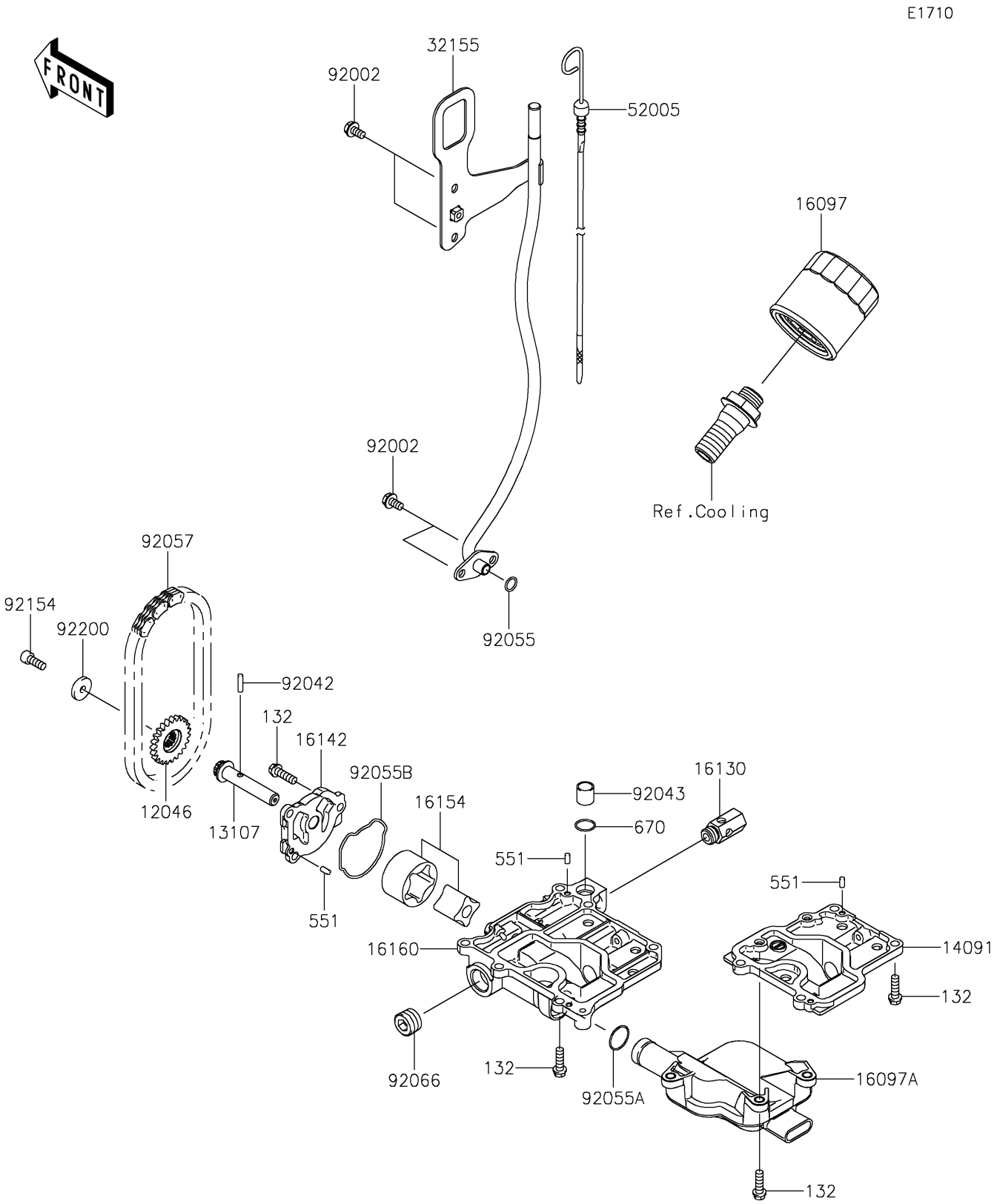

© 2026 Kawasaki Motors Corp., U.S.A.

2026 JET SKI® STX® 160LX

PARTS LIST

Oil Pump

ITEM NAME	PART NUMBER	QUANTITY

© 2026 Kawasaki Motors Corp., U.S.A.