2025 KLX230 S

PARTS DIAGRAM

Rear Fender(s)

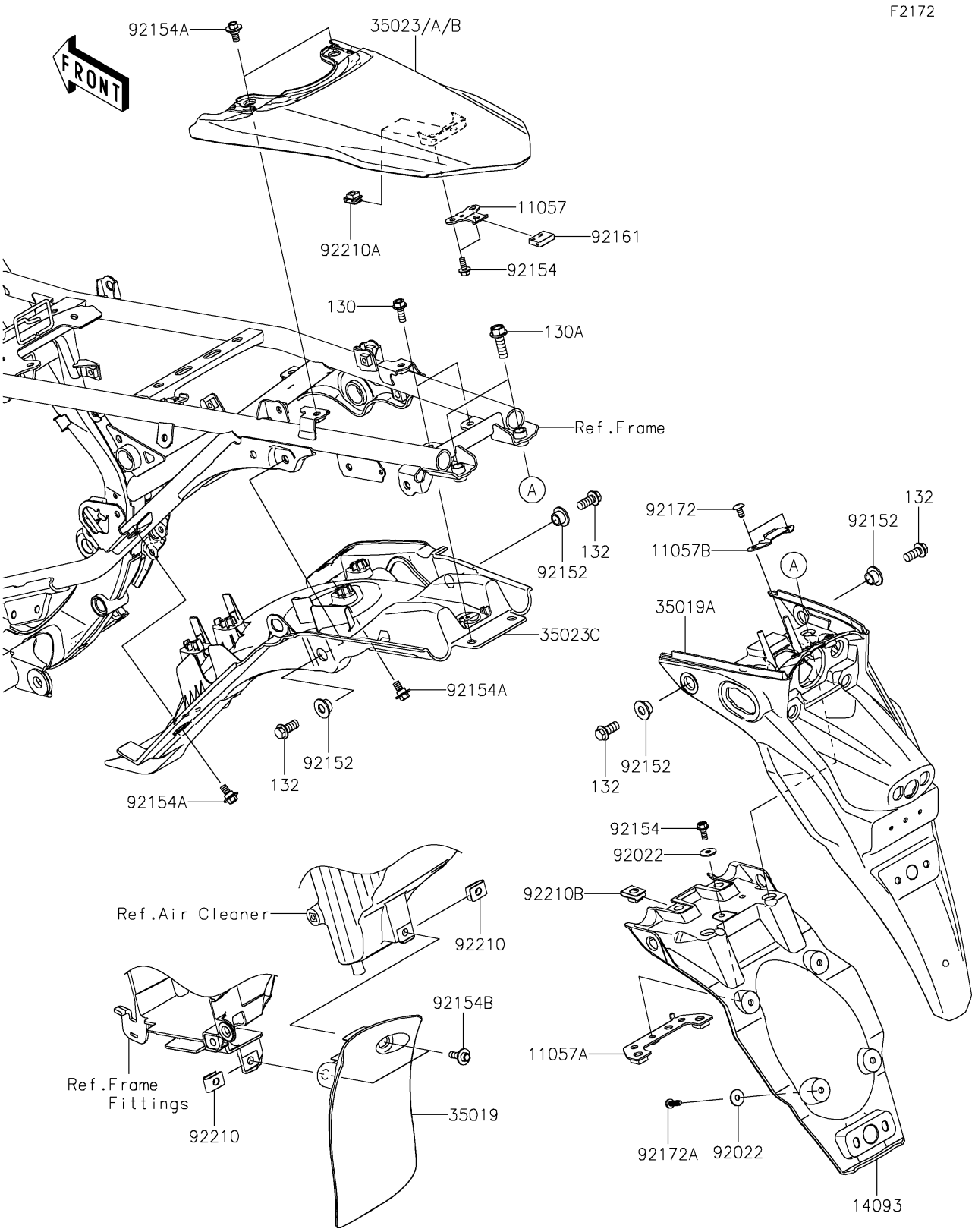

© 2026 Kawasaki Motors Corp., U.S.A.

2025 KLX230 S

PARTS LIST

Rear Fender(s)

ITEM NAME	PART NUMBER	QUANTITY
BRACKET (Ref # 11057)	11057-2330	1
BRACKET (Ref # 11057A)	11057-2331	1
BRACKET (Ref # 11057B)	11057-2332	1
COVER (Ref # 14093)	14093-0860	1
FLAP (Ref # 35019)	35019-0664	1
FLAP,RR FENDER (Ref # 35019A)	35019-0666	1
FENDER-REAR,L.GREEN (Ref # 35023A)	35023-0502-290	1
FENDER-REAR,B.GRAY (Ref # 35023B)	35023-0502-67A	1
FENDER-REAR (Ref # 35023C)	35023-0503	1
WASHER,5.2X16X1.2 (Ref # 92022)	92022-263	5
COLLAR (Ref # 92152)	92152-2542	4
BOLT,FLANGED,5X12 (Ref # 92154)	92154-1215	3
BOLT,FLANGED,6X13 (Ref # 92154A)	92154-4411	4
BOLT,FLANGED,6X14 (Ref # 92154B)	92154-7286	2
DAMPER,15X21X5.5 (Ref # 92161)	92161-1472	1
SCREW,CROS,5X10 (Ref # 92172)	92172-1255	2
SCREW,TAPPING,5X16 (Ref # 92172A)	92172-1545	4
NUT,6MM (Ref # 92210)	92210-0218	2
NUT,PLATE,5MM (Ref # 92210A)	92210-0262	2
NUT,6MM (Ref # 92210B)	92210-0474	2
BOLT-FLANGED,6X16 (Ref # 130)	130BA0616	2
BOLT-FLANGED,8X25 (Ref # 130A)	130BA0825	2
BOLT-FLANGED-SMALL,8X18 (Ref # 132)	132BA0818	4

© 2026 Kawasaki Motors Corp., U.S.A.