2026 KLX230 S

PARTS DIAGRAM

Generator

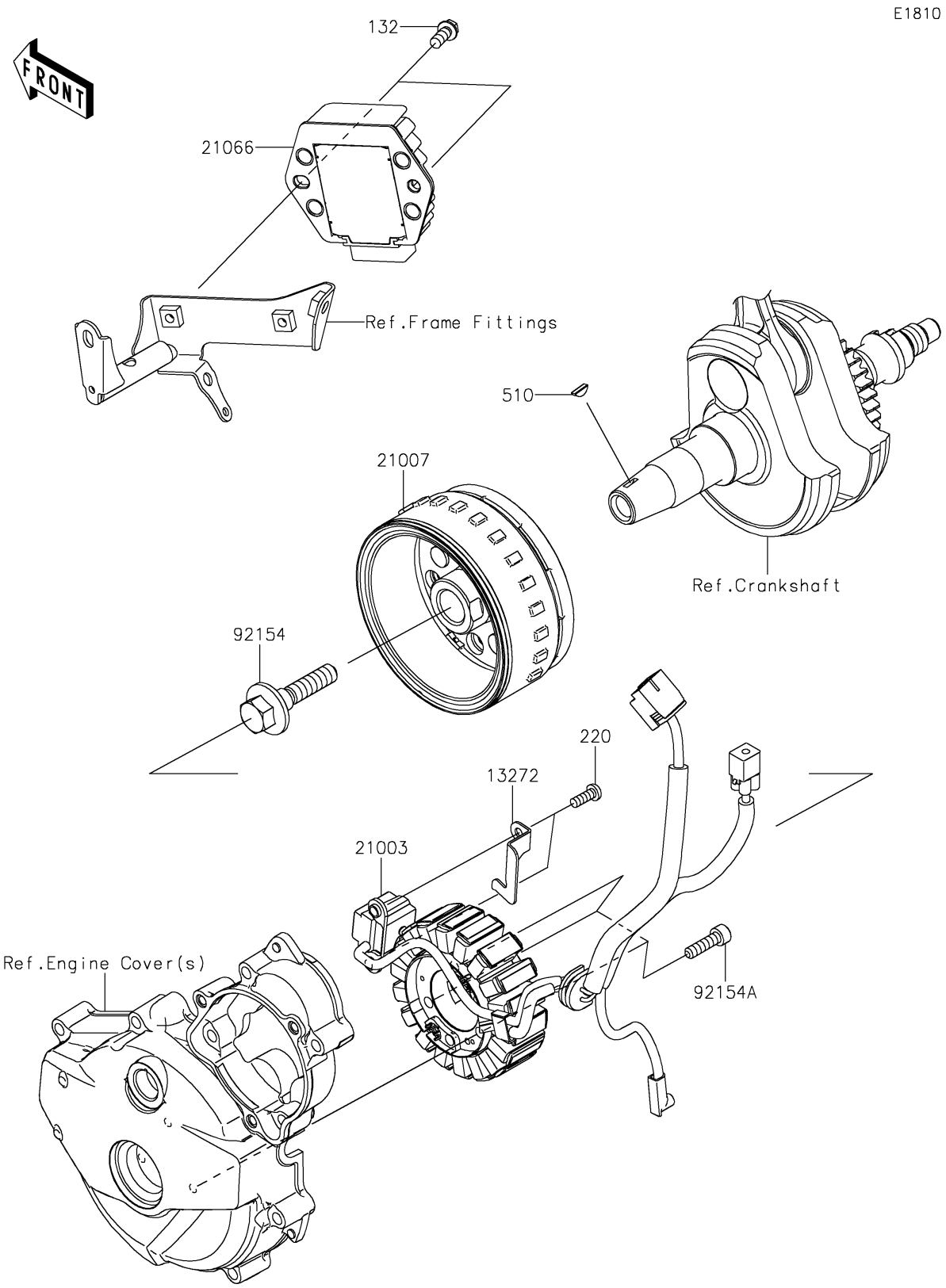

© 2026 Kawasaki Motors Corp., U.S.A.

2026 KLX230 S

PARTS LIST

Generator

ITEM NAME	PART NUMBER	QUANTITY
PLATE,PULSING COIL (Ref # 13272)	13272-2615	1
STATOR (Ref # 21003)	21003-0211	1
ROTOR (Ref # 21007)	21007-0722	1
REGULATOR-VOLTAGE (Ref # 21066)	21066-0793	1
BOLT (Ref # 92154)	92154-1309	1
BOLT,SOCKET,6X22 (Ref # 92154A)	92154-7473	3
BOLT-FLANGED-SMALL,6X14 (Ref # 132)	132BA0614	2
SCREW-PAN-CROS,5X14 (Ref # 220)	220AA0514	2
KEY-WOODRUFF (Ref # 510)	510A3100	1

© 2026 Kawasaki Motors Corp., U.S.A.