2025 KLX230 S

PARTS DIAGRAM

Gear Change Mechanism

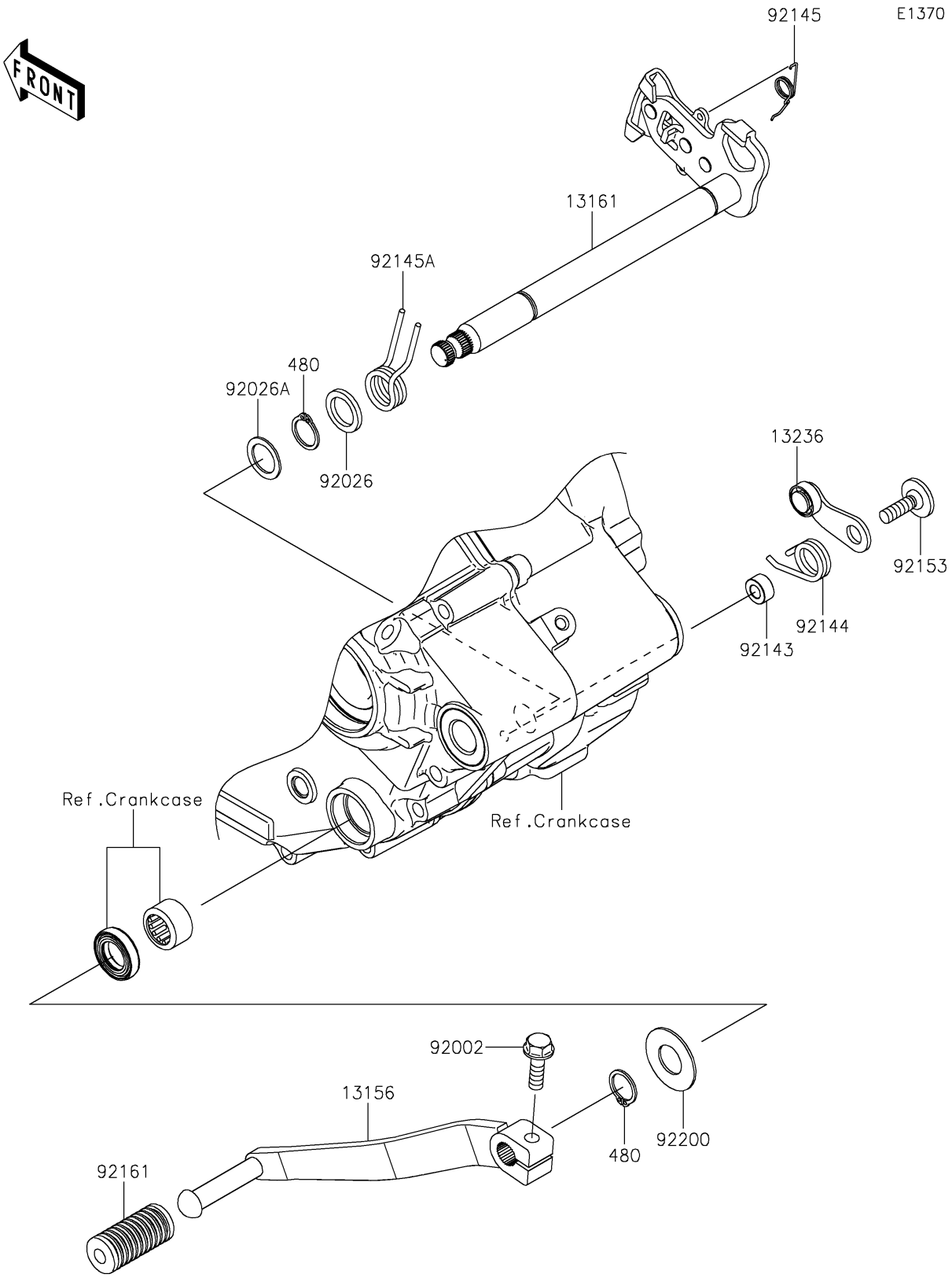

© 2026 Kawasaki Motors Corp., U.S.A.

2025 KLX230 S

PARTS LIST

Gear Change Mechanism

ITEM NAME	PART NUMBER	QUANTITY
LEVER-CHANGE,PEDAL (Ref # 13156)	13156-0695	1
LEVER-COMP-CHANGE SHAFT (Ref # 13161)	13161-0612	1
LEVER-COMP,POSITION (Ref # 13236)	13236-0818	1
BOLT,6X20 (Ref # 92002)	92002-1237	1
SPACER,14X20X2.3 (Ref # 92026)	92026-0107	1
SPACER,14X20X1.0 (Ref # 92026A)	92026-1534	1
COLLAR (Ref # 92143)	92143-1595	1
SPRING,GEAR POSITION (Ref # 92144)	92144-1523	1
SPRING (Ref # 92145)	92145-0414	1
SPRING,RETURN (Ref # 92145A)	92145-0415	1
BOLT,6X20 (Ref # 92153)	92153-1505	1
DAMPER,CHANGE PEDAL (Ref # 92161)	92161-2089	1
WASHER (Ref # 92200)	92200-0265	1
CIRCLIP-TYPE-C,14MM (Ref # 480)	480J1400	2

© 2026 Kawasaki Motors Corp., U.S.A.