2026 Ninja ZX-6R ABS

PARTS DIAGRAM

Meter(s)

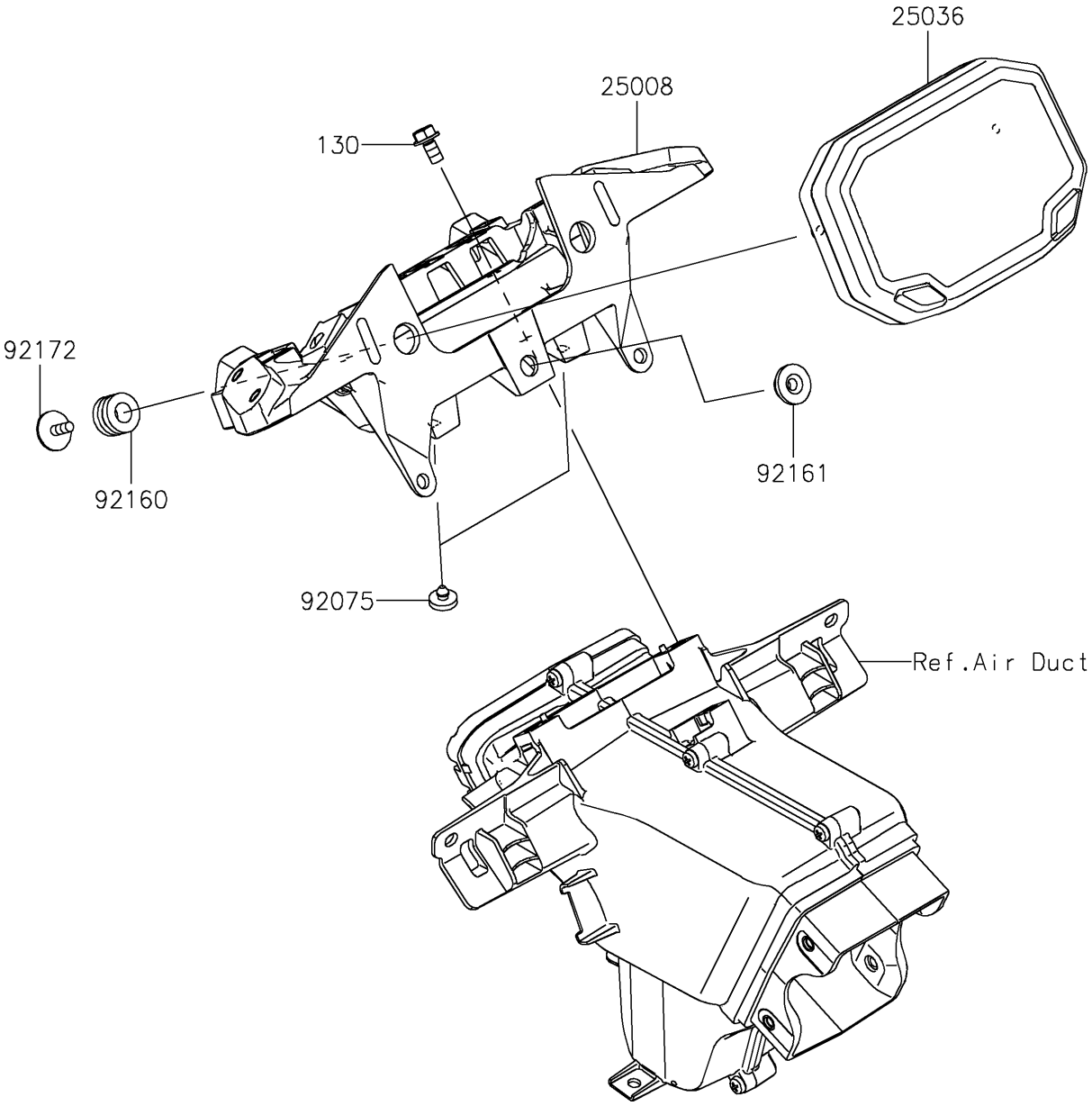

© 2026 Kawasaki Motors Corp., U.S.A.

2026 Ninja ZX-6R ABS

PARTS LIST

Meter(s)

ITEM NAME	PART NUMBER	QUANTITY
BRACKET-METER (Ref # 25008)	25008-0311	1
METER-ASSY,TFT DISPLAY (Ref # 25036)	25036-0069	1
DAMPER,BOOST SENSOR (Ref # 92075)	92075-2113	2
DAMPER,10X20X12 (Ref # 92160)	92160-1167	2
DAMPER (Ref # 92161)	92161-1531	1
SCREW,CROSS,5X14 (Ref # 92172)	92172-1226	2
BOLT-FLANGED,6X12 (Ref # 130)	130BA0612	3

© 2026 Kawasaki Motors Corp., U.S.A.