# 2017 NINJA® ZX™-6R ABS

## PARTS DIAGRAM

### Taillight(s)

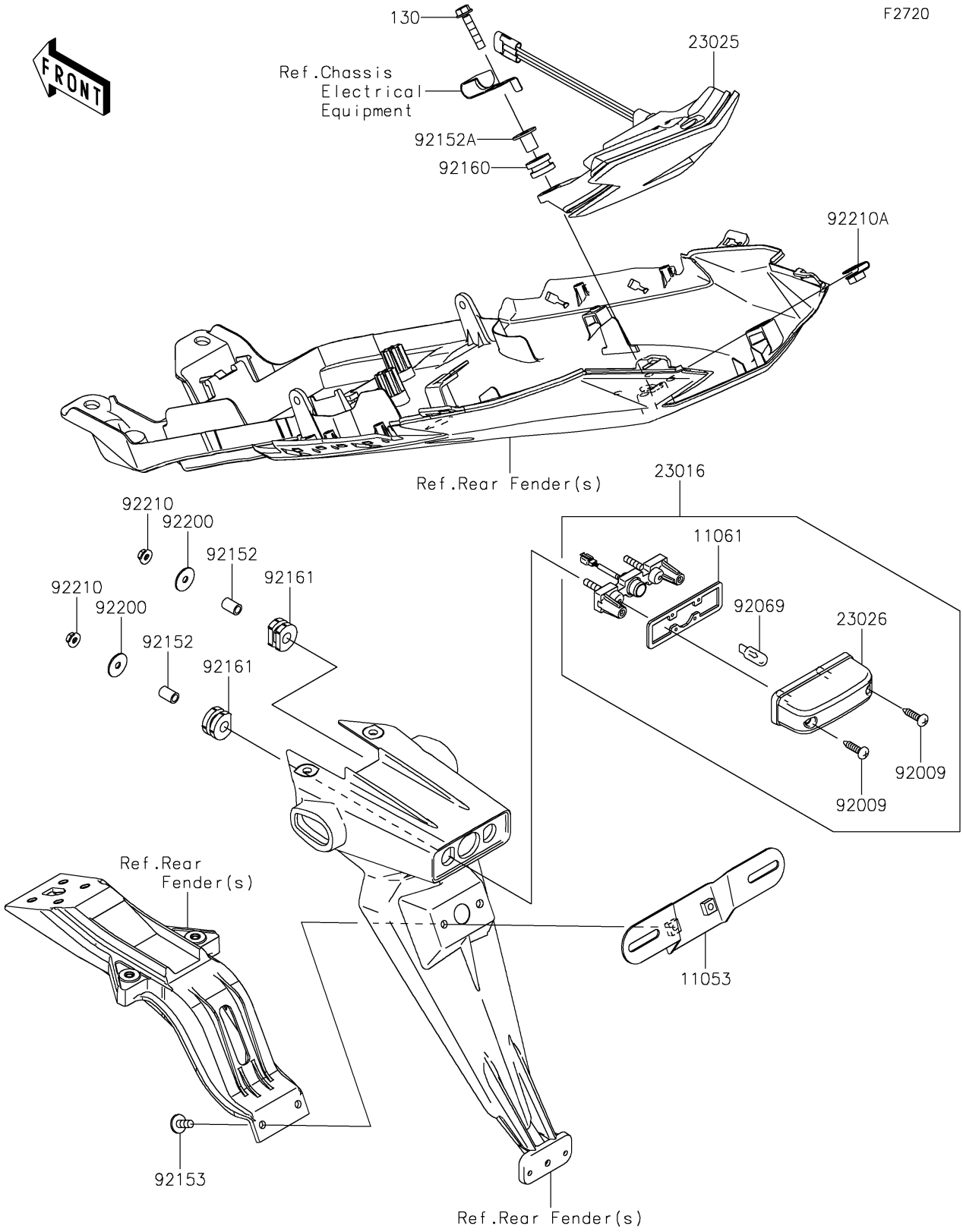


© 2026 Kawasaki Motors Corp., U.S.A.

# 2017 NINJA® ZX™-6R ABS

## PARTS LIST

### Taillight(s)

| ITEM NAME | PART NUMBER | QUANTITY |
|---|---|---|
| BRACKET,LICENSE (Ref # 11053) | 11053-0400 | 1 |
| GASKET,LICENSE LAMP (Ref # 11061) | 11061-0329 | 1 |
| LAMP-ASSY,LICENSE (Ref # 23016) | 23016-0020 | 1 |
| LAMP-TAIL,LED (Ref # 23025) | 23025-0345 | 1 |
| LENS,LICENSE LAMP (Ref # 23026) | 23026-0014 | 1 |
| SCREW,TAPPING,4X16 (Ref # 92009) | 92009-1605 | 2 |
| BULB,12V 5W (Ref # 92069) | 92069-1016 | 1 |
| COLLAR,6X9X13.3 (Ref # 92152) | 92152-0617 | 2 |
| COLLAR (Ref # 92152A) | 92152-0703 | 2 |
| BOLT,SOCKET,6X14 (Ref # 92153) | 92153-1446 | 2 |
| DAMPER,10X20X12 (Ref # 92160) | 92160-1167 | 2 |
| DAMPER (Ref # 92161) | 92161-0776 | 2 |
| WASHER,5.5X20X1.2 (Ref # 92200) | 92200-0284 | 2 |
| NUT,FLANGED,5MM (Ref # 92210) | 92210-0007 | 2 |
| NUT,6MM (Ref # 92210A) | 92210-0277 | 2 |
| BOLT-FLANGED,6X30 (Ref # 130) | 130BB0630 | 2 |

© 2026 Kawasaki Motors Corp., U.S.A.