2017 Ninja ZX-6R ABS KRT Edition

PARTS DIAGRAM

Fuel Tank

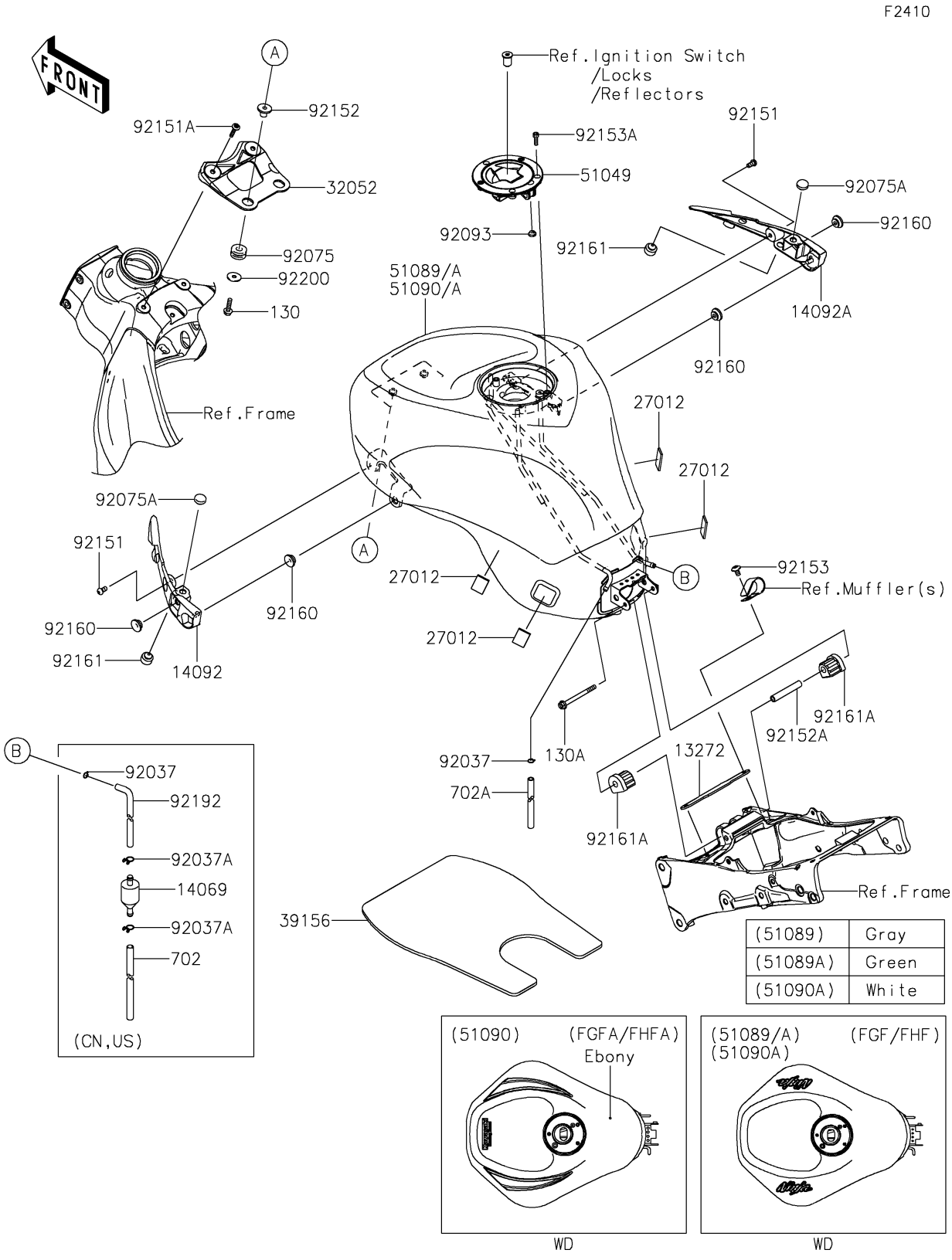

© 2026 Kawasaki Motors Corp., U.S.A.

2017 Ninja ZX-6R ABS KRT Edition

Kawasaki
Let the Good Times Roll®

PARTS LIST

Fuel Tank

ITEM NAME	PART NUMBER	QUANTITY
PLATE,FUEL TANK,RR (Ref # 13272)	13272-0505	1
COVER,TANK,LH (Ref # 14092)	14092-1087	1
COVER,TANK,RH (Ref # 14092A)	14092-1088	1
HOOK (Ref # 27012)	27012-0115	4
BRACKET-TANK (Ref # 32052)	32052-0727	1
PAD,FUEL TANK (Ref # 39156)	39156-0469	1
CAP-TANK,FUEL (Ref # 51049)	51049-0039	1
TANK-COMP-FUEL,EBONY (Ref # 51090)	51090-5015-H8	1
DAMPER,10X24X12 (Ref # 92075)	92075-1690	2
DAMPER (Ref # 92075A)	92075-1983	2
SEAL,FUEL TANK CAP (Ref # 92093)	92093-1030	1
BOLT,SOCKET,6X12 (Ref # 92151)	92151-1219	2
BOLT,SOCKET,6X30 (Ref # 92151A)	92151-1605	2
COLLAR,6.3X10X14.5 (Ref # 92152)	92152-0091	2
COLLAR,6.8X10X60 (Ref # 92152A)	92152-1182	1
BOLT,SOCKET,6X10 (Ref # 92153)	92153-0410	1
BOLT,SOCKET,5X16 (Ref # 92153A)	92153-1616	3
DAMPER (Ref # 92160)	92160-1613	4
DAMPER (Ref # 92161)	92161-0738	2
DAMPER,FUEL TANK,RR (Ref # 92161A)	92161-1330	2
WASHER,6.5X22X1.6 (Ref # 92200)	92200-1087	2
BOLT-FLANGED,6X22 (Ref # 130)	130BA0622	2
BOLT-FLANGED,6X70 (Ref # 130A)	130BB0670	1
TUBE-RUBBER,6X850 (Ref # 702A)	702A06850	1

© 2026 Kawasaki Motors Corp., U.S.A.