2016 Ninja ZX-6R

PARTS DIAGRAM

Front Fender(s)

F2171

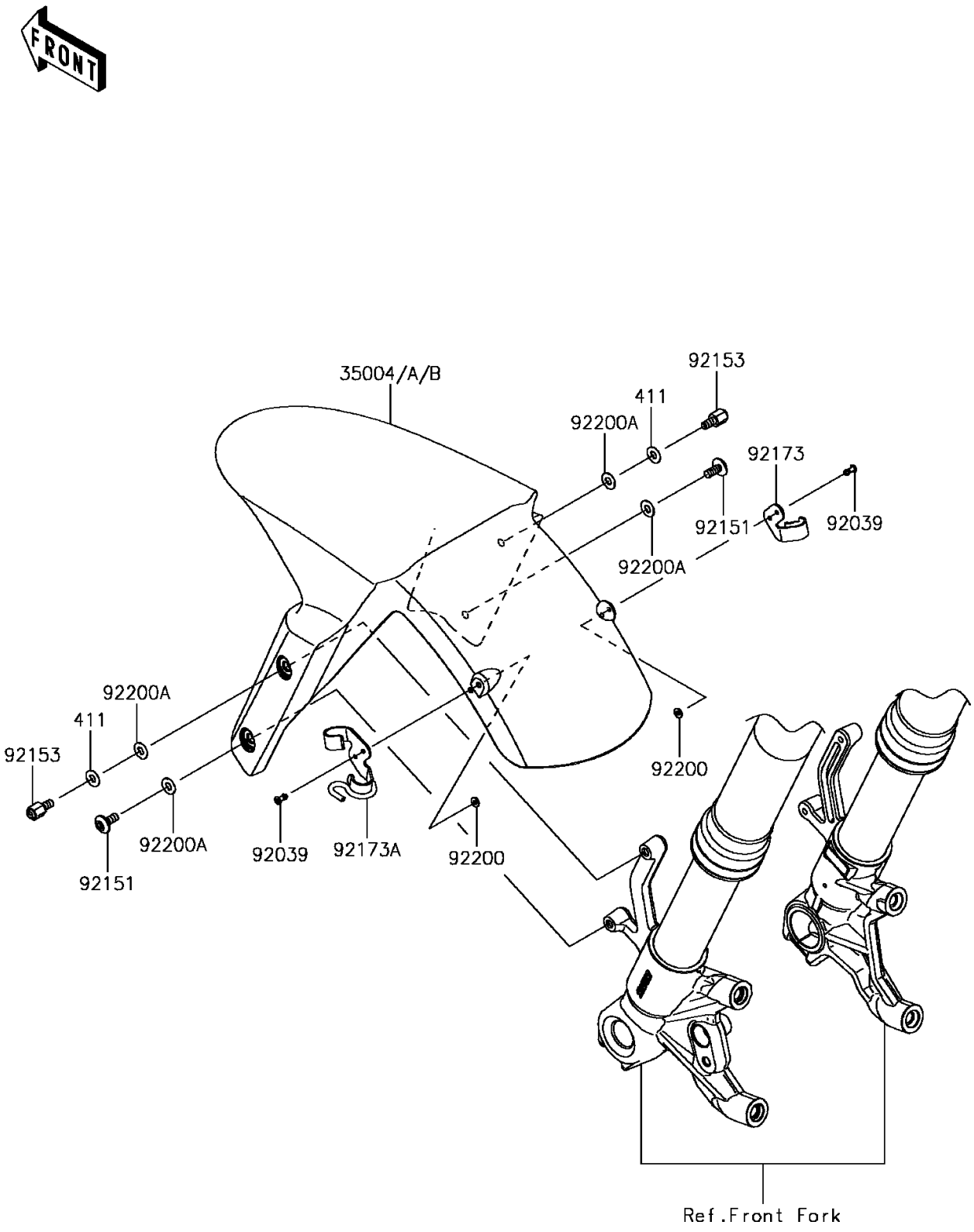

© 2026 Kawasaki Motors Corp., U.S.A.

2016 Ninja ZX-6R

PARTS LIST

Front Fender(s)

ITEM NAME	PART NUMBER	QUANTITY
FENDER-FRONT,M.M.C.GRAY (Ref # 35004)	35004-0310-51B	1
FENDER-FRONT,L.GREEN (Ref # 35004B)	35004-0310-777	1
RIVET (Ref # 92039)	92039-1231	4
BOLT,SOCKET,6X14 (Ref # 92151)	92151-1654	2
BOLT,6MM (Ref # 92153)	92153-0335	2
CLAMP,FR FENDER,RH (Ref # 92173)	92173-0984	1
CLAMP,FR FENDER,LH (Ref # 92173A)	92173-1065	1
WASHER,3.5X8X1 (Ref # 92200)	92200-1251	4
WASHER,6.5X14X1 (Ref # 92200A)	92200-1388	4
WASHER-PLAIN,6MM (Ref # 411)	411AB0600	2

© 2026 Kawasaki Motors Corp., U.S.A.