2015 NINJA® ZX™-6R ABS 30TH ANNIVERSARY

Kawasaki
Let the Good Times Roll®

PARTS DIAGRAM

Meter(s)

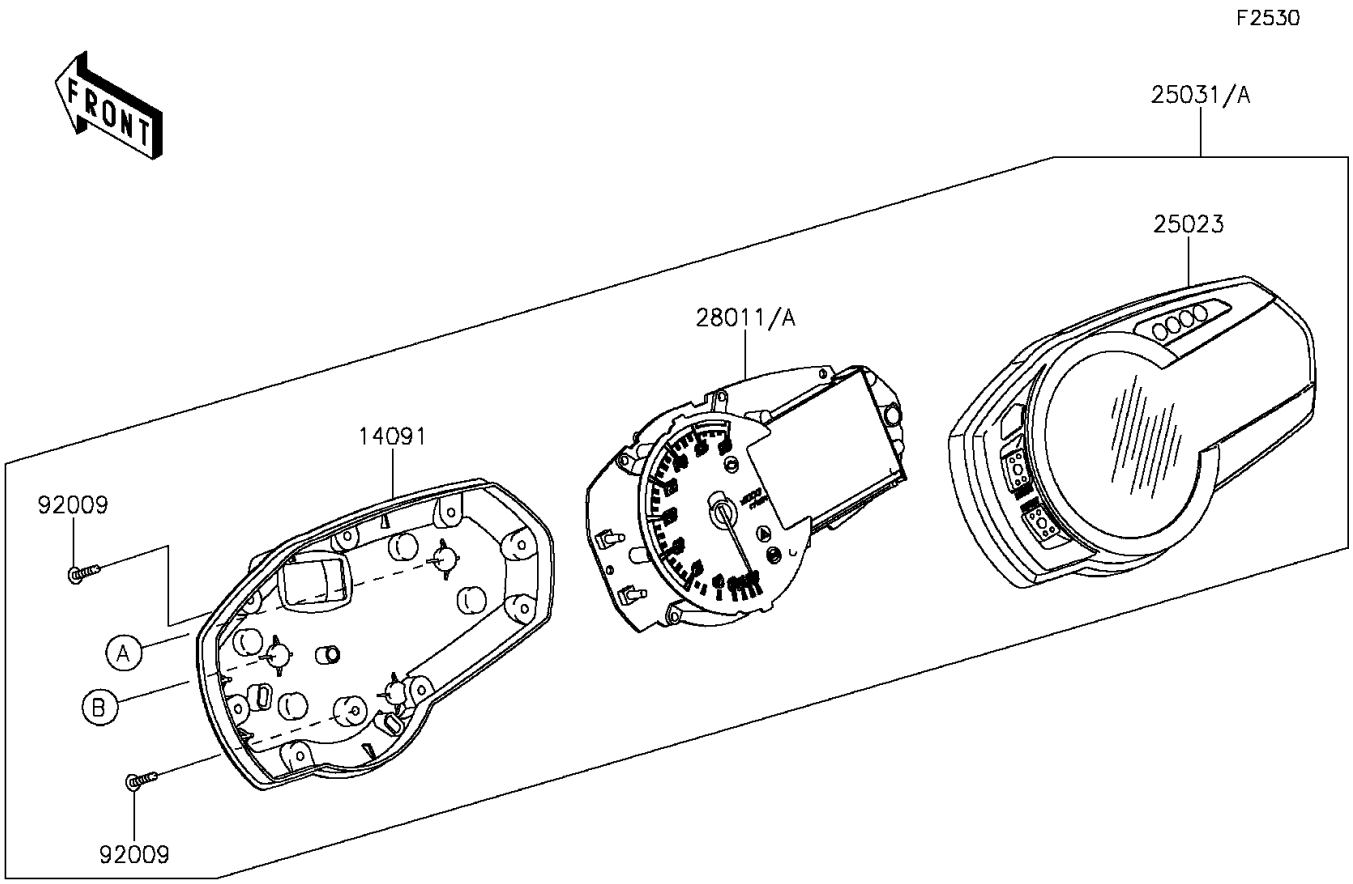

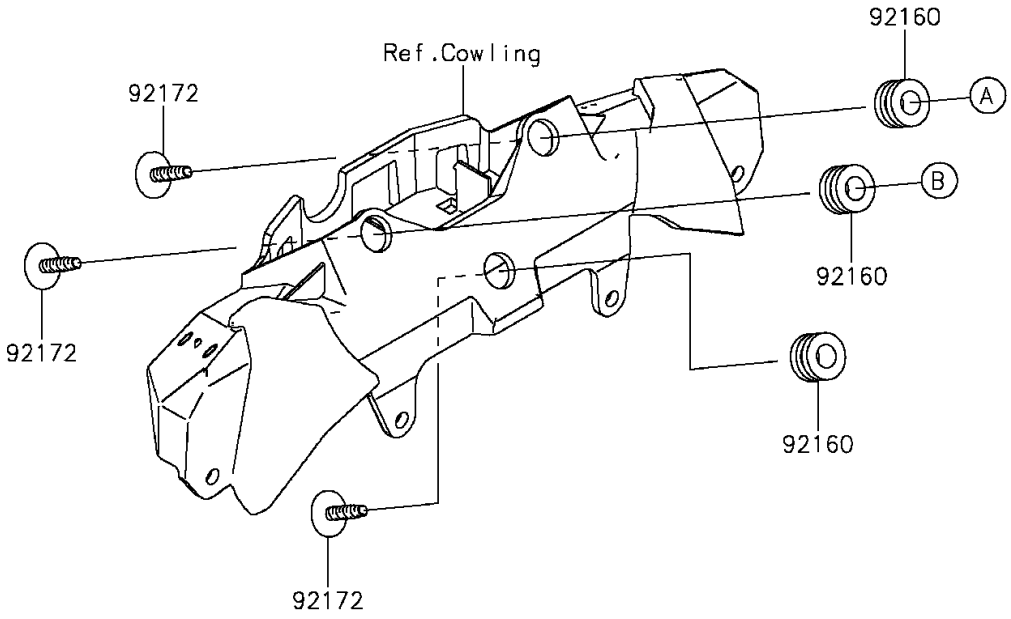

© 2026 Kawasaki Motors Corp., U.S.A.

2015 NINJA® ZX™-6R ABS 30TH ANNIVERSARY

Kawasaki
Let the Good Times Roll®

PARTS LIST

Meter(s)

ITEM NAME	PART NUMBER	QUANTITY
COVER,METER,LWR (Ref # 14091)	14091-1739	1
COVER-METER CASE,UPP (Ref # 25023)	25023-0047	1
METER-ASSY,COMBINATION (Ref # 25031)	25031-0436	1
METER-ASSY,COMBINATION,ABS (Ref # 25031A)	25031-0618	1
METER,TACHO&LCD (Ref # 28011)	28011-0583	1
METER,TACHO&LCD (Ref # 28011A)	28011-0631	1
SCREW,TAPPING,3X16 (Ref # 92009)	92009-1391	9
DAMPER,10X20X12 (Ref # 92160)	92160-1167	3
SCREW,TAPPING,WP,5X14 (Ref # 92172)	92172-0441	3

© 2026 Kawasaki Motors Corp., U.S.A.