2015 NINJA® ZX™-6R

PARTS DIAGRAM

Stand(s)

F2190

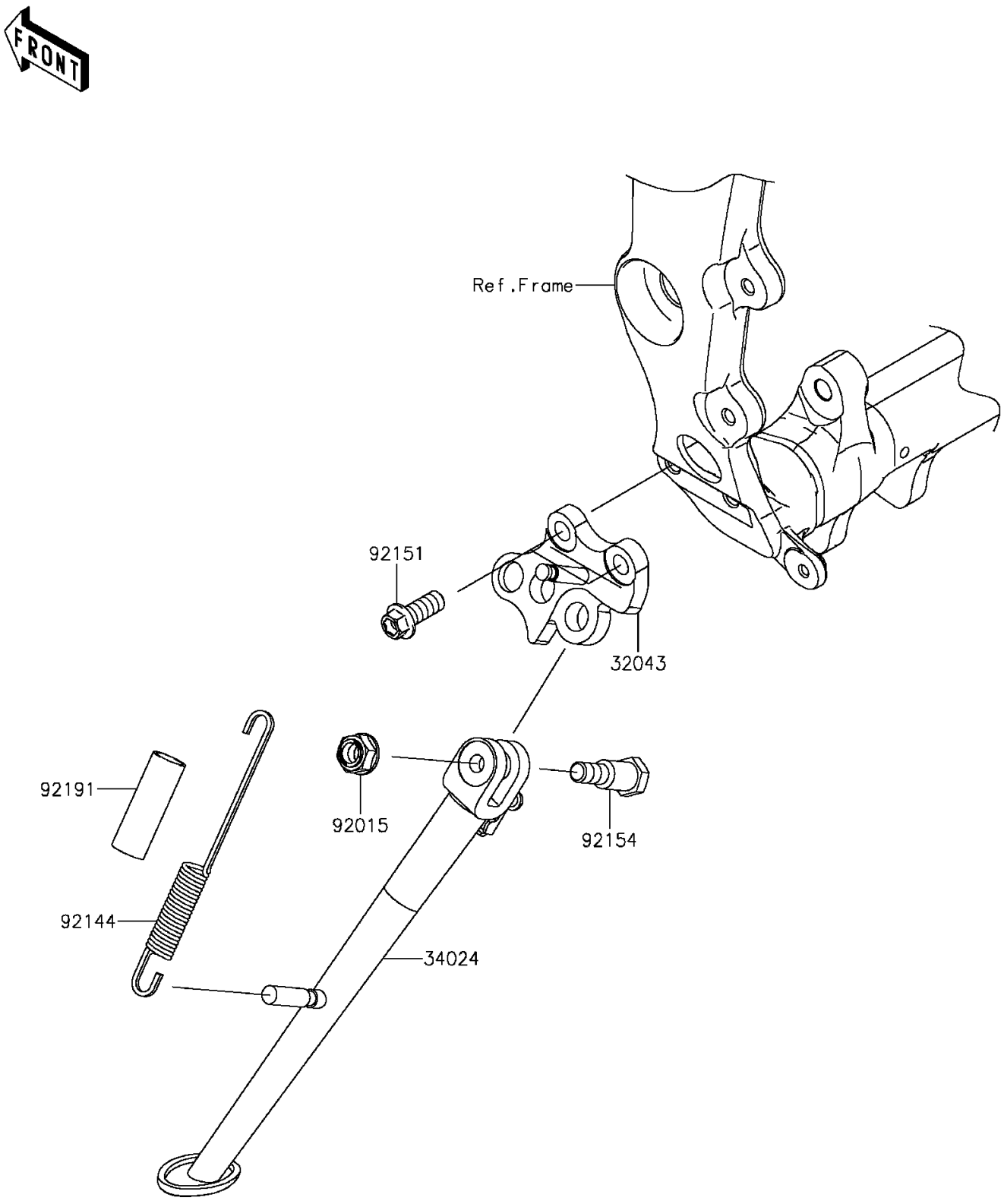

© 2026 Kawasaki Motors Corp., U.S.A.

2015 NINJA® ZX™-6R

PARTS LIST

Stand(s)

ITEM NAME	PART NUMBER	QUANTITY

© 2026 Kawasaki Motors Corp., U.S.A.