2024 NINJA® ZX™-6R

PARTS DIAGRAM

Stand(s)

F2190

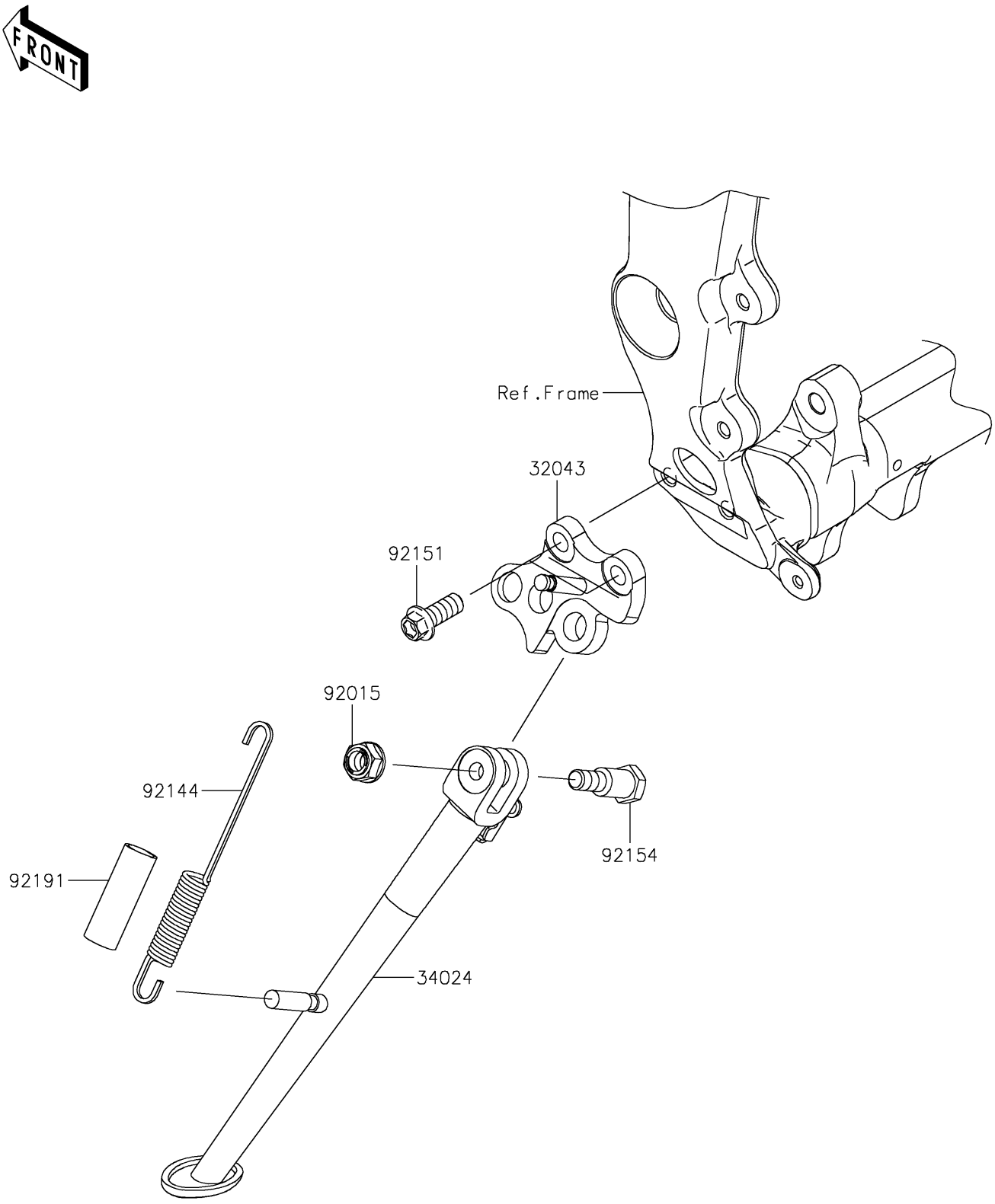

© 2026 Kawasaki Motors Corp., U.S.A.

2024 NINJA® ZX™-6R

PARTS LIST

Stand(s)

ITEM NAME	PART NUMBER	QUANTITY
BRACKET-STAND,F.S.BLACK (Ref # 32043)	32043-0576-18R	1
STAND-SIDE (Ref # 34024)	34024-0115	1
NUT,LOCK,FLANGED,10MM (Ref # 92015)	92015-1717	1
SPRING,SIDE STAND (Ref # 92144)	92144-1818	1
BOLT,FLANGED,10X25 (Ref # 92151)	92151-1802	2
BOLT,10X39 (Ref # 92154)	92154-0971	1
TUBE,13X16X60 (Ref # 92191)	92191-1001	1

© 2026 Kawasaki Motors Corp., U.S.A.