2024 NINJA® ZX™-6R

PARTS DIAGRAM

Footrests

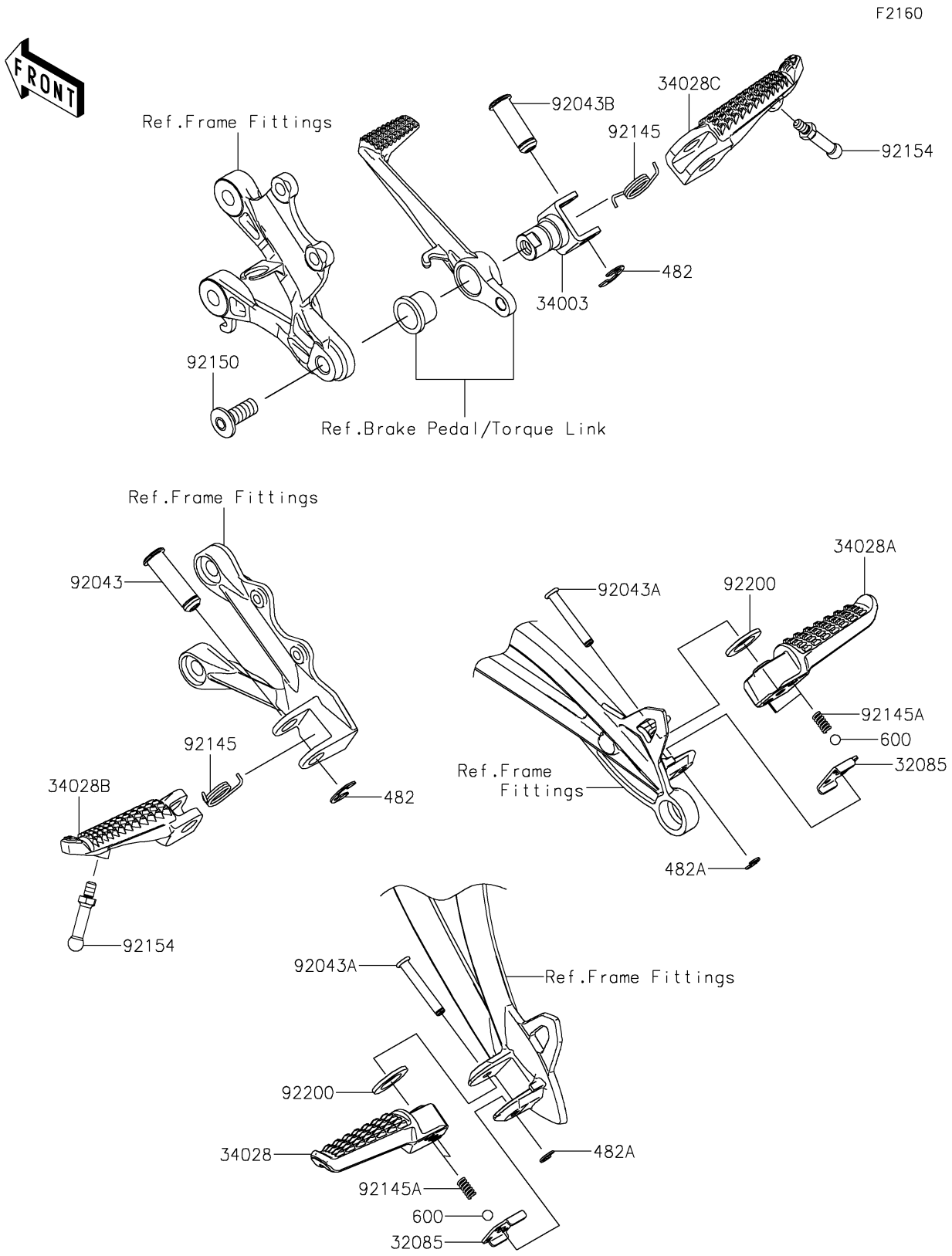

© 2026 Kawasaki Motors Corp., U.S.A.

2024 NINJA® ZX™-6R

PARTS LIST

Footrests

ITEM NAME	PART NUMBER	QUANTITY
STOPPER,REAR STEP (Ref # 32085)	32085-0047	2
HOLDER-STEP,FR,RH (Ref # 34003)	34003-0097	1
STEP,RR,LH (Ref # 34028)	34028-0380	1
STEP,RR,RH (Ref # 34028A)	34028-0381	1
STEP,FR,LH (Ref # 34028B)	34028-0406	1
STEP,FR,RH (Ref # 34028C)	34028-0407	1
PIN,12X36.5 (Ref # 92043)	92043-0028	1
PIN,6X40 (Ref # 92043A)	92043-1595	2
PIN,12X35.5 (Ref # 92043B)	92043-1701	1
SPRING,STEP RETURN (Ref # 92145)	92145-0376	2
SPRING (Ref # 92145A)	92145-1319	4
BOLT,SOCKET,10X25 (Ref # 92150)	92150-1268	1
BOLT,BANK SENSOR (Ref # 92154)	92154-1186	2
WASHER,16X26X2.3 (Ref # 92200)	92200-0043	2
CIRCLIP-TYPE-E,10MM (Ref # 482)	482EA0100	2
CIRCLIP-TYPE-E (Ref # 482A)	482EA5000	2
BALL-STEEL,1/4 (Ref # 600)	600A0800	4

© 2026 Kawasaki Motors Corp., U.S.A.