2023 NINJA® ZX™-6R KRT EDITION

PARTS DIAGRAM

Rear Brake

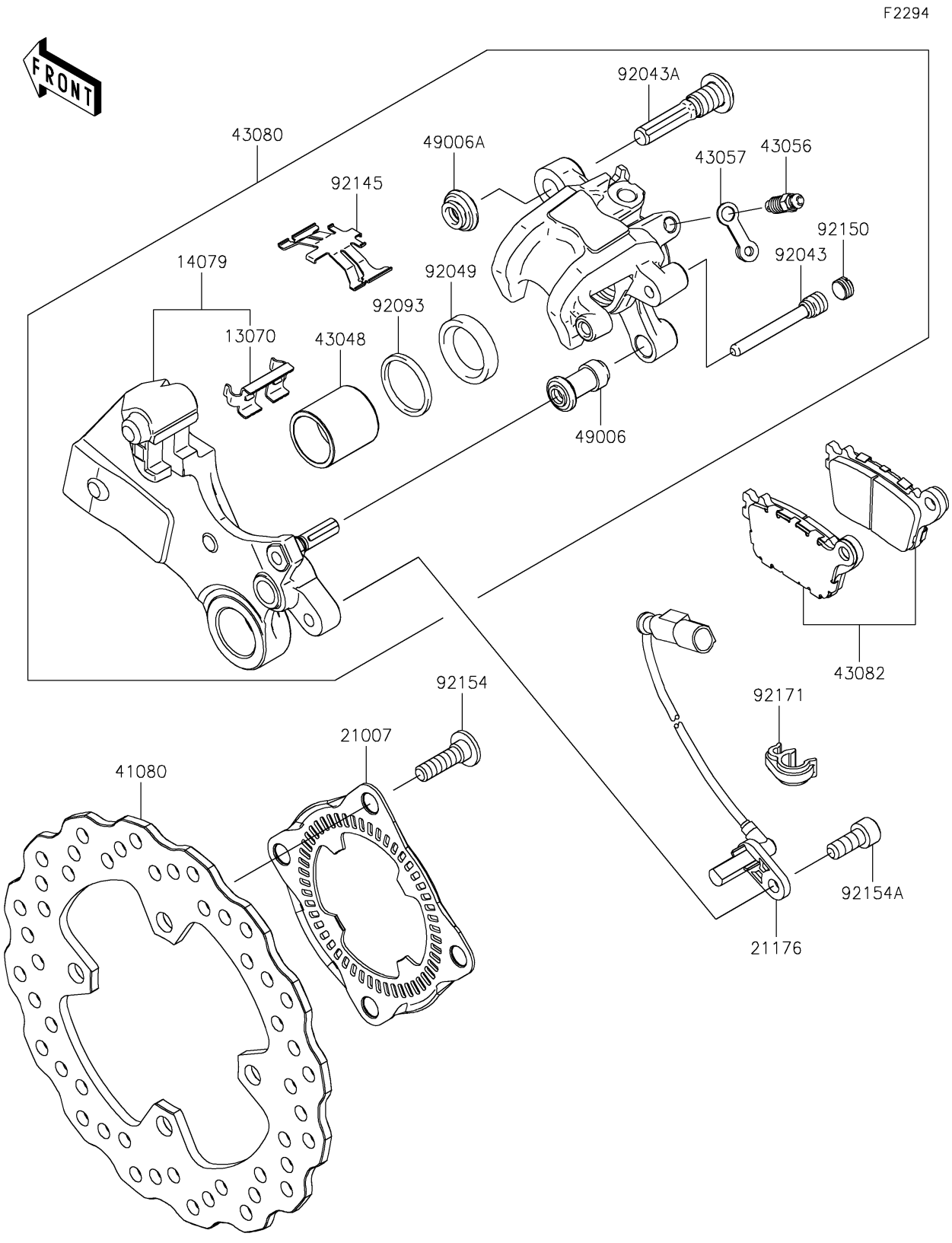

© 2026 Kawasaki Motors Corp., U.S.A.

2023 NINJA® ZX™-6R KRT EDITION

Kawasaki
Let the Good Times Roll®

PARTS LIST

Rear Brake

ITEM NAME	PART NUMBER	QUANTITY
GUIDE (Ref # 13070)	13070-0126	1
HOLDER-ASSY (Ref # 14079)	14079-0576	1
ROTOR,RR WHEEL (Ref # 21007)	21007-0670	1
SENSOR,SPEED,RR (Ref # 21176)	21176-0738	1
DISC,RR (Ref # 41080)	41080-0211	1
PISTON-CALIPER (Ref # 43048)	43048-0018	1
BREATHER (Ref # 43056)	43056-1055	1
CAP-BREATHER (Ref # 43057)	43057-1001	1
CALIPER-SUB-ASSY,RR,BLACK (Ref # 43080)	43080-0114-DJ	1
PAD-ASSY-BRAKE (Ref # 43082)	43082-0133	1
BOOT,CALIPER (Ref # 49006)	49006-1088	1
BOOT,CALIPER (Ref # 49006A)	49006-1242	1
PIN,PAD (Ref # 92043)	92043-0106	1
PIN (Ref # 92043A)	92043-1508	1
SEAL-OIL,PISTON (Ref # 92049)	92049-1331	1
SEAL,PISTON (Ref # 92093)	92093-1272	1
SPRING (Ref # 92145)	92145-0810	1
BOLT,PLUG (Ref # 92150)	92150-1692	1
BOLT,SOCKET,8X30 (Ref # 92154)	92154-1865	4
BOLT,SOCKET,8X20 (Ref # 92154A)	92154-1976	1
CLAMP,BRAKE HOSE (Ref # 92171)	92171-1819	3

© 2026 Kawasaki Motors Corp., U.S.A.