# 2023 NINJA® ZX™-6R KRT EDITION

## PARTS DIAGRAM

### Front Wheel

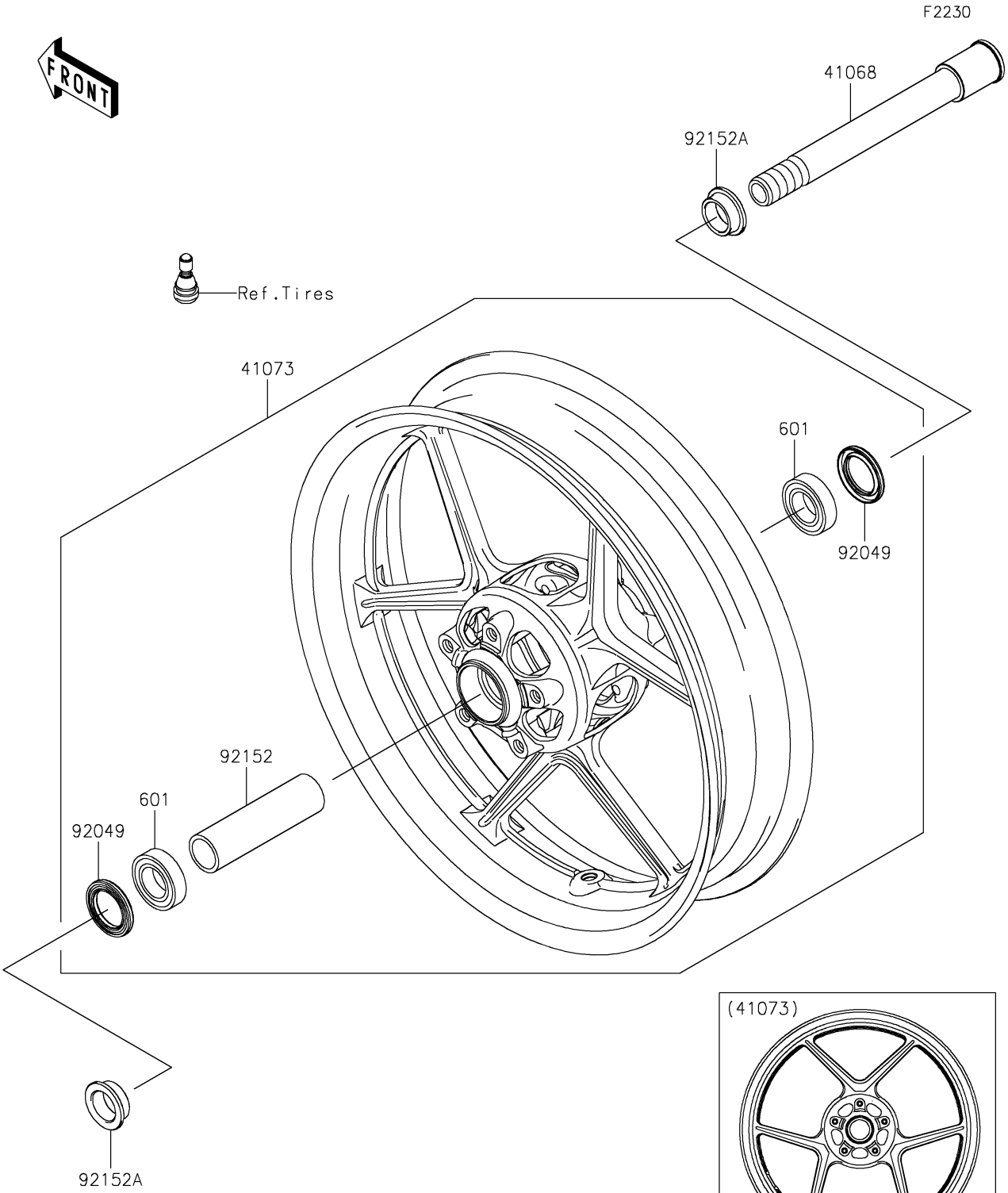


© 2026 Kawasaki Motors Corp., U.S.A.

# 2023 NINJA® ZX™-6R KRT EDITION

## PARTS LIST

### Front Wheel

| ITEM NAME | PART NUMBER | QUANTITY |
|---|---|---|
| AXLE,FR,25X207 (Ref # 41068) | 41068-0599 | 1 |
| WHEEL-ASSY,FR,G.BLACK (Ref # 41073) | 41073-0728-18F | 1 |
| SEAL-OIL,BJN-C2 32X47X5 (Ref # 92049) | 92049-0050 | 2 |
| COLLAR,FR HUB,L=115 (Ref # 92152) | 92152-0242 | 1 |
| COLLAR,FR AXLE,L=13 (Ref # 92152A) | 92152-1470 | 2 |
| BEARING-BALL,#6005UU (Ref # 601) | 601B6005UU | 2 |

© 2026 Kawasaki Motors Corp., U.S.A.