2023 NINJA® ZX™-6R

PARTS DIAGRAM

Handlebar

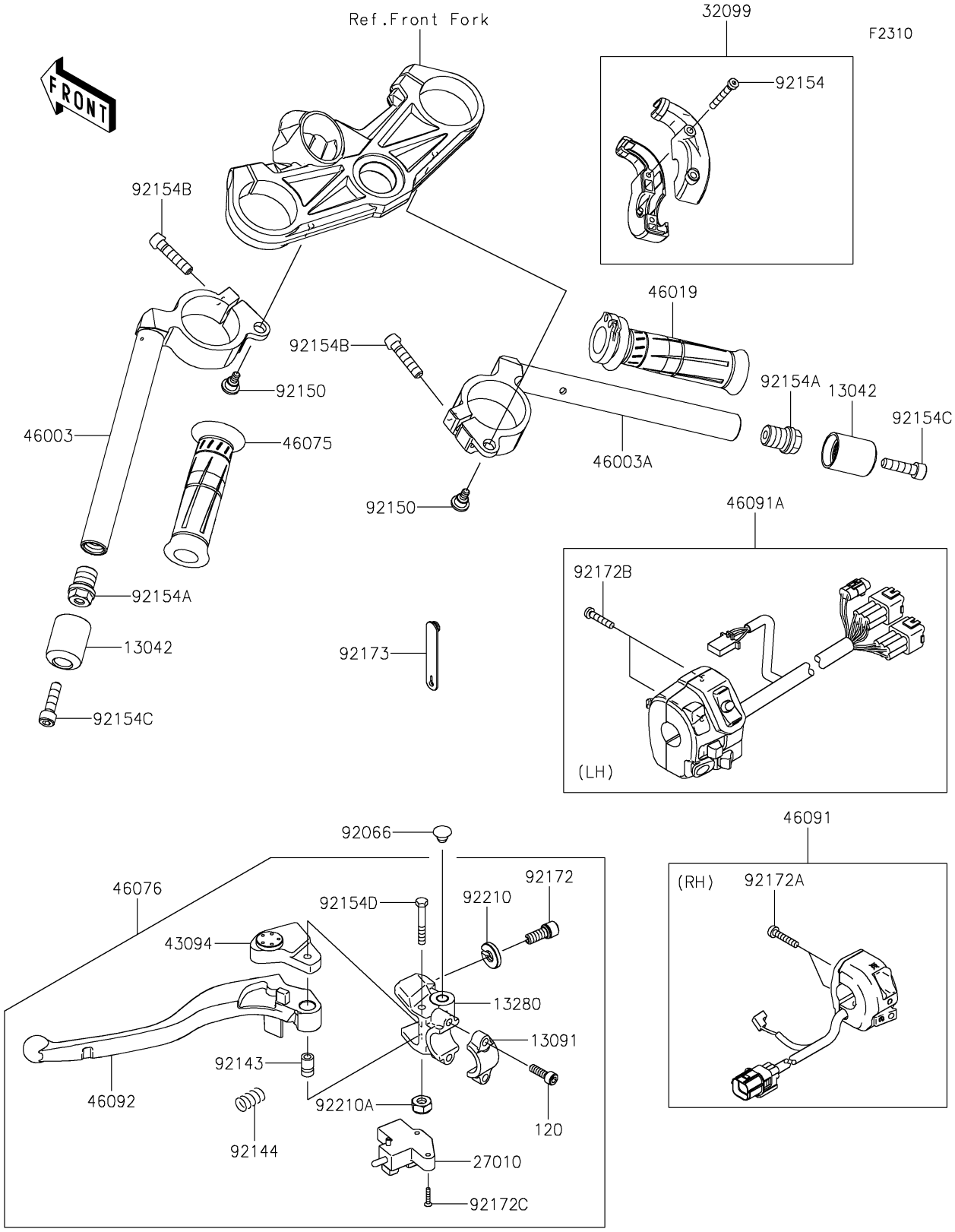

© 2026 Kawasaki Motors Corp., U.S.A.

2023 NINJA® ZX™-6R

PARTS LIST

Handlebar

ITEM NAME	PART NUMBER	QUANTITY
WEIGHT,HANDLE (Ref # 13042)	13042-5001	2
HOLDER,CLUTCH LEVER (Ref # 13091)	13091-1624	1
HOLDER,CLUTCH LEVER (Ref # 13280)	13280-0248	1
SWITCH,CLUTCH (Ref # 27010)	27010-0854	1
CASE,THROTTLE (Ref # 32099)	32099-0766	1
ADJUSTER (Ref # 43094)	43094-0008	1
HANDLE,LH (Ref # 46003)	46003-0600	1
HANDLE,RH (Ref # 46003A)	46003-0601	1
GRIP-ASSY,THROTTLE (Ref # 46019)	46019-0020	1
GRIP,LH (Ref # 46075)	46075-0068	1
LEVER-ASSY-GRIP,CLUTCH (Ref # 46076)	46076-0121	1
HOUSING-ASSY-CONTROL,RH (Ref # 46091)	46091-0421	1
HOUSING-ASSY-CONTROL,LH (Ref # 46091A)	46091-0613	1
LEVER-GRIP (Ref # 46092)	46092-0568	1
PLUG,9.5X8,POLYETHYLENE (Ref # 92066)	92066-1077	1
COLLAR (Ref # 92143)	92143-1379	1
SPRING (Ref # 92144)	92144-1467	1
BOLT,6MM (Ref # 92150)	92150-1090	2
BOLT,SOCKET,5X35 (Ref # 92154)	92154-1530	2
BOLT,17X18 (Ref # 92154A)	92154-1902	2
BOLT,SOCKET,8X35 (Ref # 92154B)	92154-1969	2
BOLT,SOCKET,8X30 (Ref # 92154C)	92154-1970	2
BOLT (Ref # 92154D)	92154-2318	1
SCREW (Ref # 92172)	92172-1138	1
SCREW-PAN-CROS,5X22 (Ref # 92172A)	92172-1139	2
SCREW-PAN-CROS,5X25 (Ref # 92172B)	92172-1140	2
SCREW,3X16 (Ref # 92172C)	92172-1185	2
CLAMP (Ref # 92173)	92173-1526	1
NUT (Ref # 92210)	92210-1519	1

© 2026 Kawasaki Motors Corp., U.S.A.

2023 NINJA® ZX™-6R

PARTS LIST

Handlebar

ITEM NAME	PART NUMBER	QUANTITY
NUT,LOCK,6MM (Ref # 92210A)	92210-1544	1
BOLT-SOCKET,6X20 (Ref # 120)	120CC0620	2

© 2026 Kawasaki Motors Corp., U.S.A.