2023 NINJA® ZX™-6R

PARTS DIAGRAM

Gear Change Drum/Shift Fork(s)

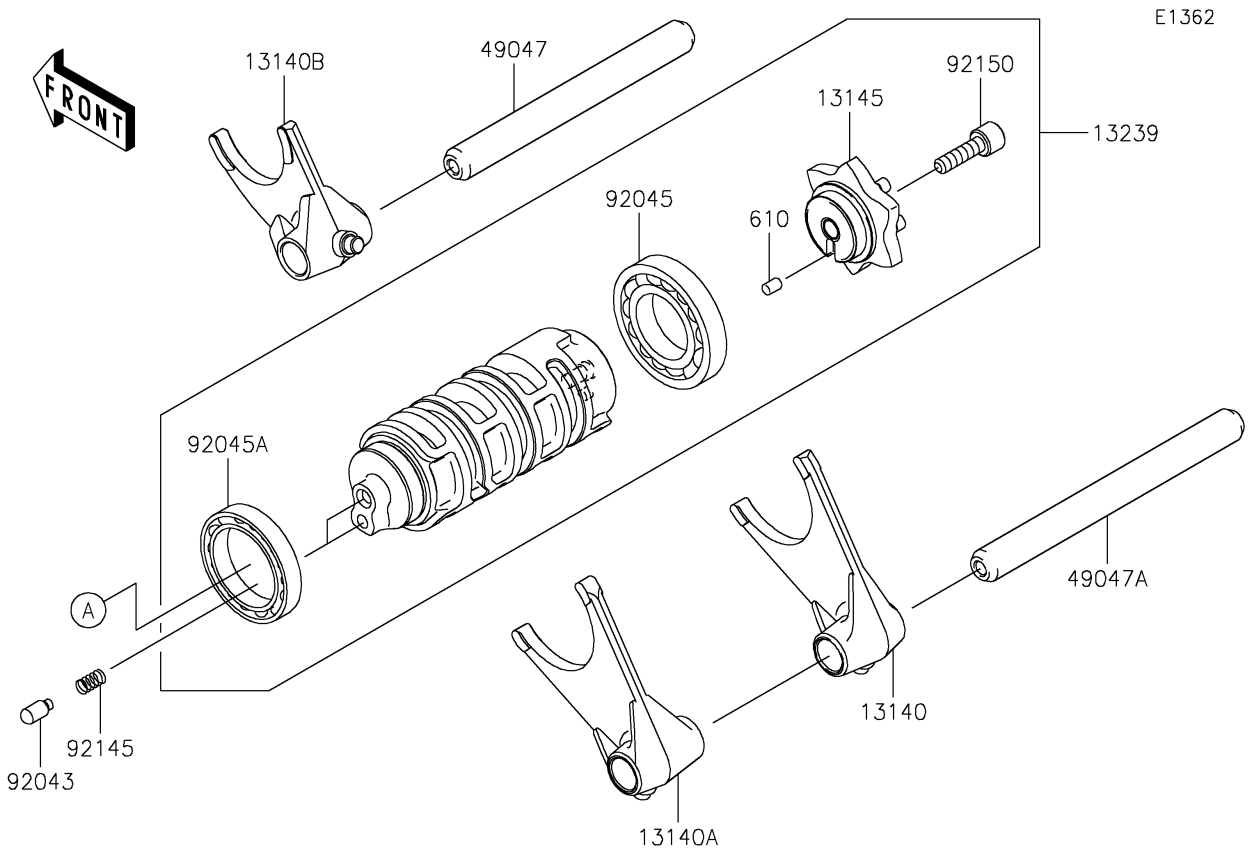

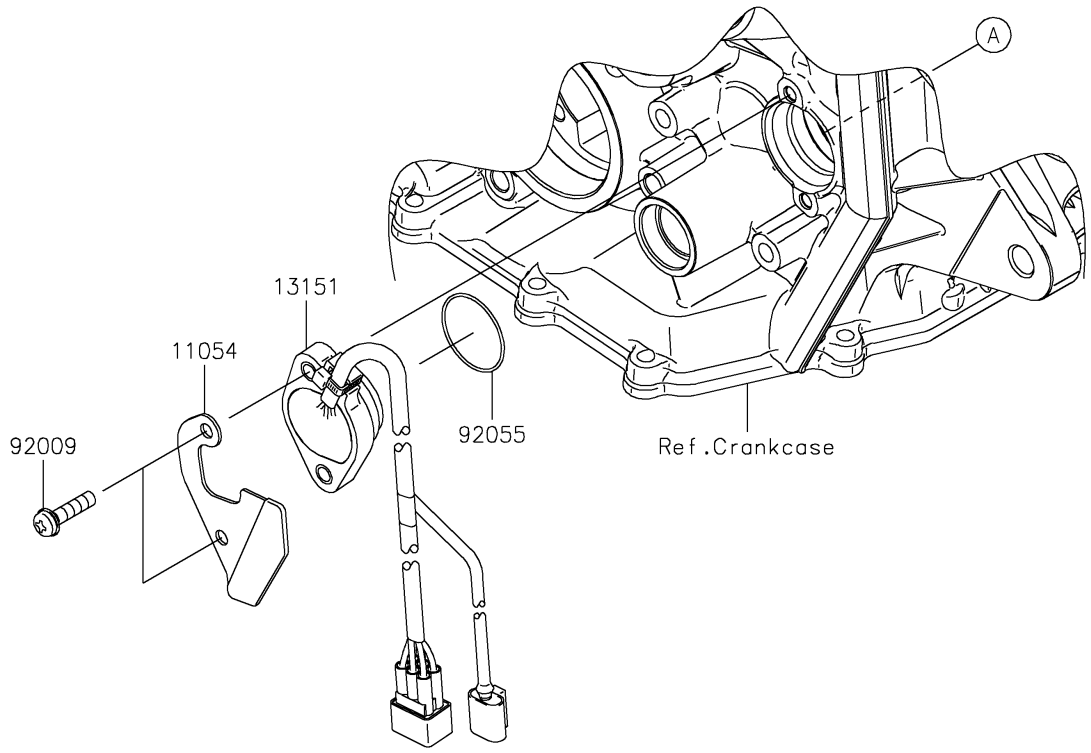

© 2026 Kawasaki Motors Corp., U.S.A.

2023 NINJA® ZX™-6R

PARTS LIST

Gear Change Drum/Shift Fork(s)

ITEM NAME	PART NUMBER	QUANTITY
BRACKET (Ref # 11054)	11054-1840	1
FORK-SHIFT,OUTPUT,RH (Ref # 13140)	13140-0041	1
FORK-SHIFT,OUTPUT,LH (Ref # 13140A)	13140-0042	1
FORK-SHIFT,INPUT (Ref # 13140B)	13140-0048	1
CAM-CHANGE DRUM (Ref # 13145)	13145-0029	1
SWITCH-COMP,GEAR POSITION (Ref # 13151)	13151-0607	1
DRUM-ASSY-CHANGE (Ref # 13239)	13239-0024	1
ROD-SHIFT,INPUT (Ref # 49047)	49047-0026	1
ROD-SHIFT,OUTPUT (Ref # 49047A)	49047-0027	1
SCREW,PAN-WP-CROS,5X20 (Ref # 92009)	92009-1905	2
PIN (Ref # 92043)	92043-1654	2
BEARING-BALL,16005 (Ref # 92045)	92045-1045	1
BEARING-BALL,6806 (Ref # 92045A)	92045-1152	1
RING-O,27.7X2.4 (Ref # 92055)	92055-091	1
SPRING (Ref # 92145)	92145-1414	2
BOLT,SOCKET,6X20 (Ref # 92150)	92150-1880	1
ROLLER,4X6 (Ref # 610)	610A0406	1

© 2026 Kawasaki Motors Corp., U.S.A.