2021 NINJA® ZX™-6R KRT EDITION

PARTS DIAGRAM

Accessory(Engine Guard)

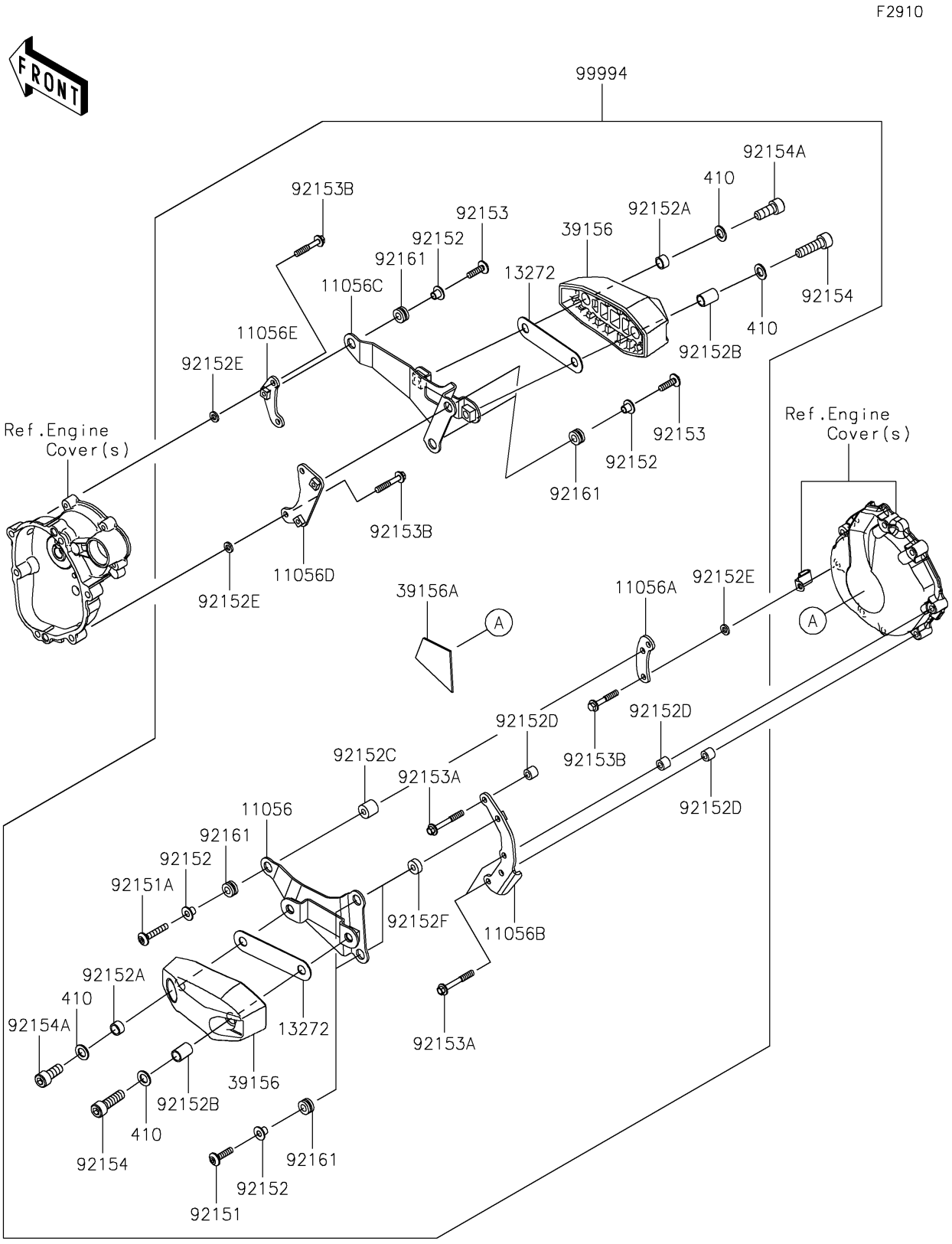

© 2026 Kawasaki Motors Corp., U.S.A.

2021 NINJA® ZX™-6R KRT EDITION

Kawasaki
Let the Good Times Roll®

PARTS LIST

Accessory(Engine Guard)

ITEM NAME	PART NUMBER	QUANTITY

© 2026 Kawasaki Motors Corp., U.S.A.