2020 NINJA® ZX™-6R ABS KRT EDITION

PARTS DIAGRAM

Turn Signals

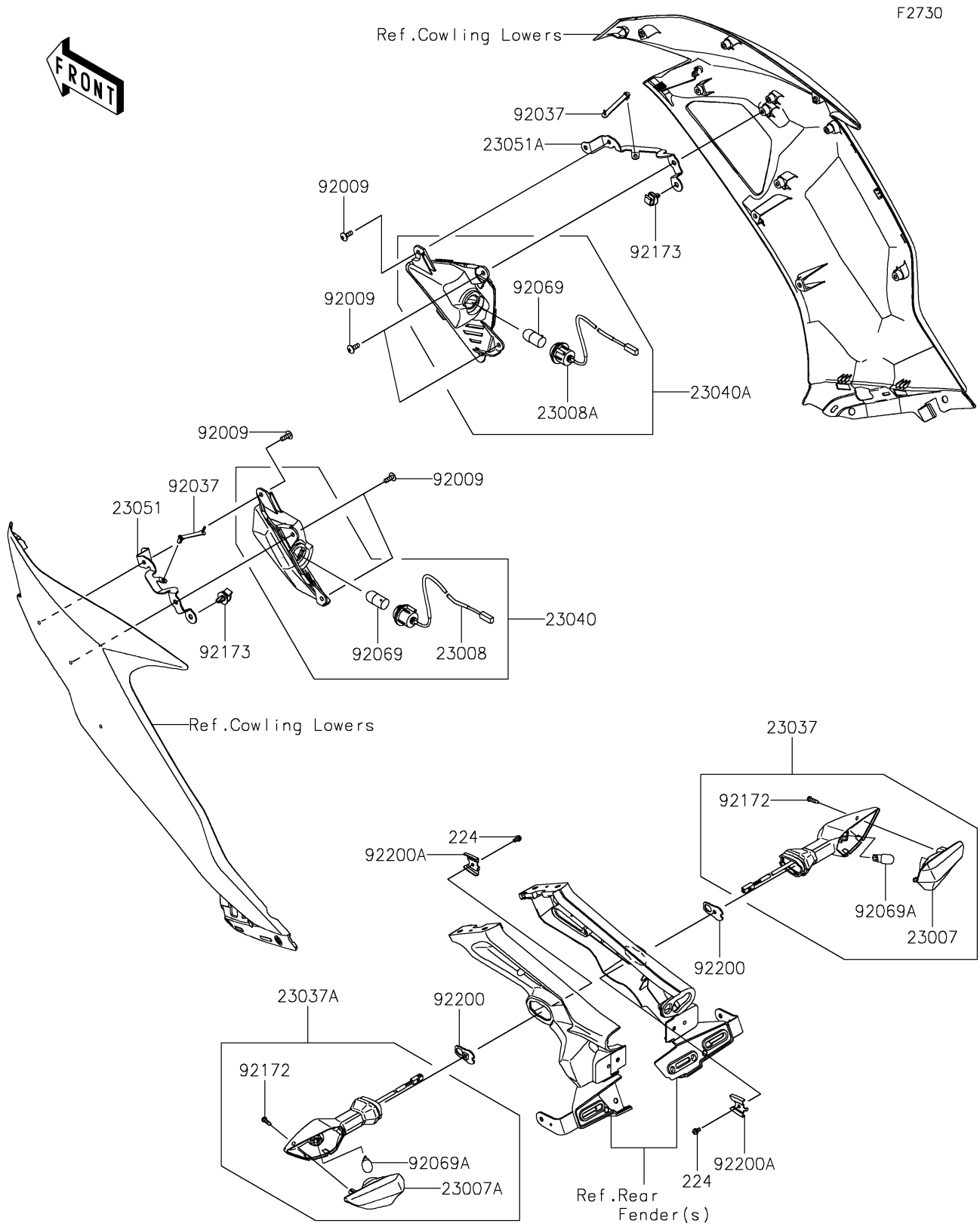

© 2026 Kawasaki Motors Corp., U.S.A.

2020 NINJA® ZX™-6R ABS KRT EDITION

Kawasaki
Let the Good Times Roll®

PARTS LIST

Turn Signals

ITEM NAME	PART NUMBER	QUANTITY
LENS-COMP (Ref # 23007)	23007-0205	1
LENS-COMP (Ref # 23007A)	23007-0206	1
SOCKET-ASSY,LH (Ref # 23008)	23008-0165	1
SOCKET-ASSY,RH (Ref # 23008A)	23008-0166	1
LAMP-ASSY-SIGNAL,RR RH (Ref # 23037)	23037-0362	1
LAMP-ASSY-SIGNAL,RR LH (Ref # 23037A)	23037-0363	1
LAMP-SIGNAL,FR,LH (Ref # 23040)	23040-0137	1
LAMP-SIGNAL,FR,RH (Ref # 23040A)	23040-0138	1
BRACKET-SIGNAL LAMP,LH (Ref # 23051)	23051-0046	1
BRACKET-SIGNAL LAMP,RH (Ref # 23051A)	23051-0047	1
SCREW,TAPPING,5X14 (Ref # 92009)	92009-1197	6
CLAMP,SPEED,L=43 (Ref # 92037)	92037-1290	2
BULB,12V 10W (Ref # 92069)	92069-0058	2
BULB,12V 10W (Ref # 92069A)	92069-0090	2
SCREW,4X14 (Ref # 92172)	92172-1117	2
CLAMP,CABLE CLIP (Ref # 92173)	92173-1022	2
WASHER,NUT 4MM (Ref # 92200)	92200-0854	2
WASHER (Ref # 92200A)	92200-0855	2
SCREW-PAN-WP-CROS,4X8 (Ref # 224)	224AB0408	2

© 2026 Kawasaki Motors Corp., U.S.A.