2026 Ninja 500

PARTS DIAGRAM

Cables

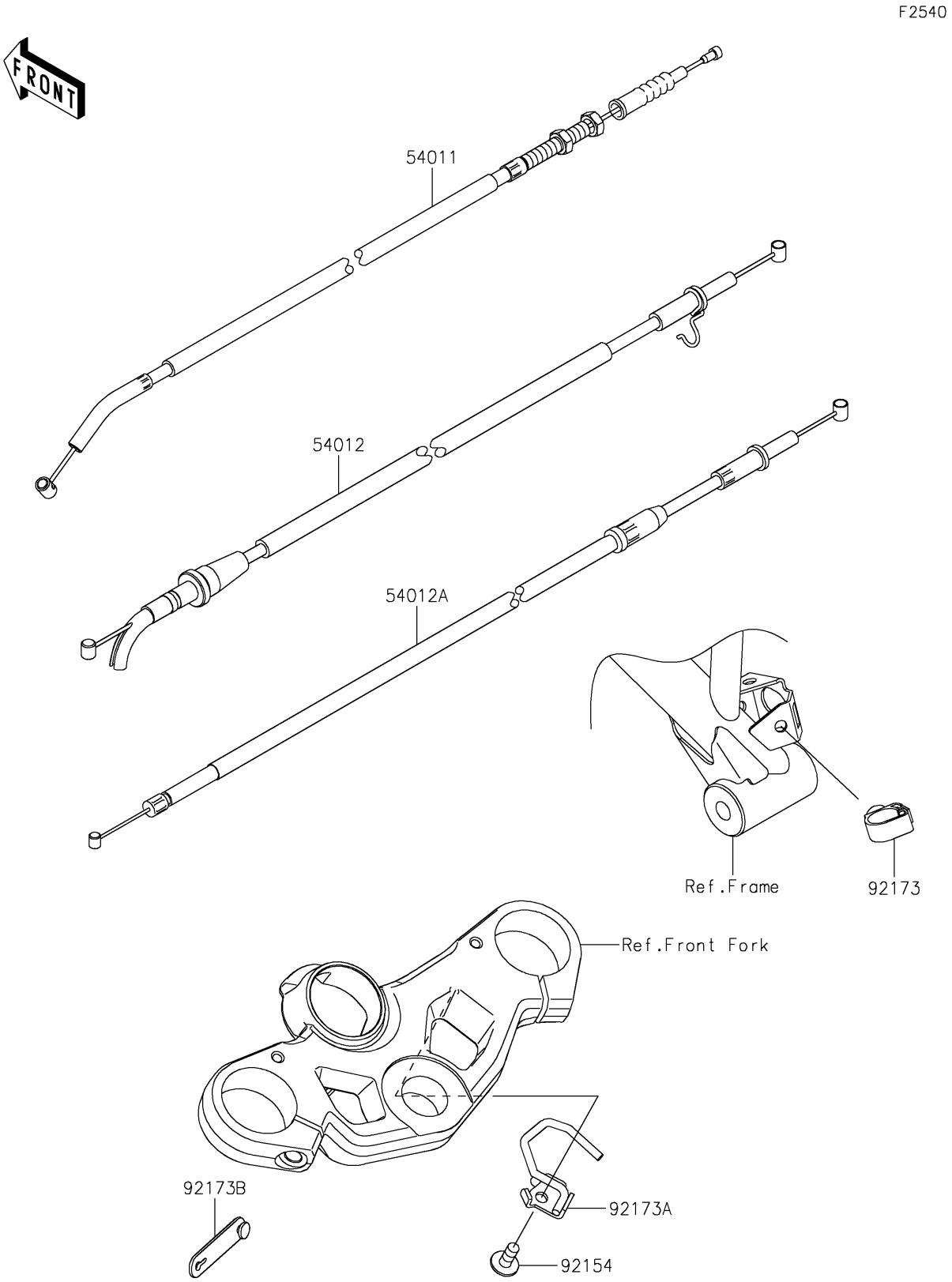

© 2026 Kawasaki Motors Corp., U.S.A.

2026 Ninja 500

PARTS LIST

Cables

ITEM NAME	PART NUMBER	QUANTITY
CABLE-CLUTCH (Ref # 54011)	54011-0666	1
CABLE-THROTTLE,OPEN (Ref # 54012)	54012-0733	1
CABLE-THROTTLE,CLOSE (Ref # 54012A)	54012-0734	1
BOLT,SOCKET,6X14 (Ref # 92154)	92154-0907	1
CLAMP,HOLDER CLIP (Ref # 92173)	92173-0868	1
CLAMP,UPP HOLDER,RH (Ref # 92173A)	92173-1789	1
CLAMP (Ref # 92173B)	92173-2199	1

© 2026 Kawasaki Motors Corp., U.S.A.