2026 Ninja 500

PARTS DIAGRAM

Frame Fittings

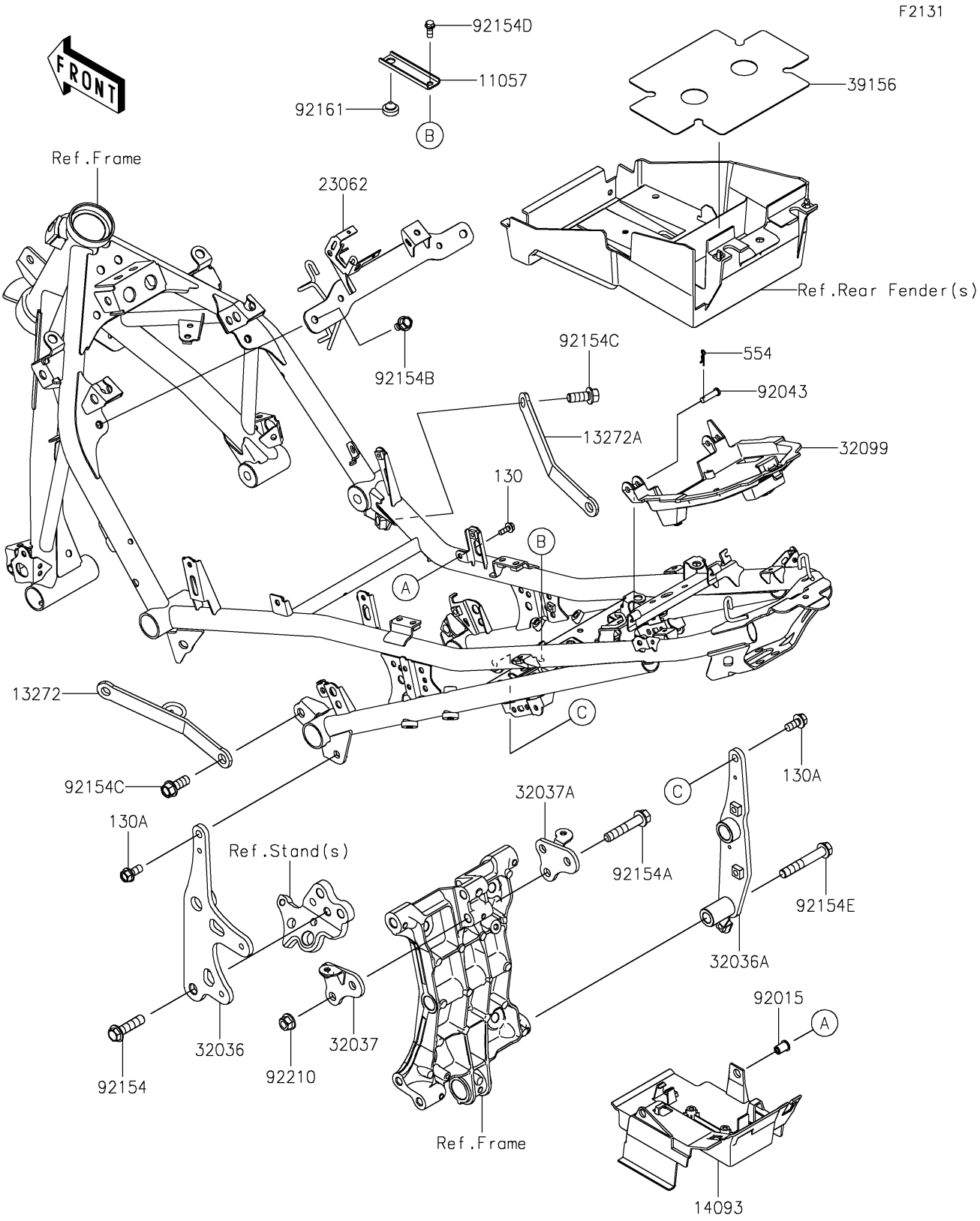

© 2026 Kawasaki Motors Corp., U.S.A.

2026 Ninja 500

PARTS LIST

Frame Fittings

ITEM NAME	PART NUMBER	QUANTITY
BRACKET,BATTERY (Ref # 11057)	11057-1605	1
PLATE,LH (Ref # 13272)	13272-4271	1
PLATE,RH (Ref # 13272A)	13272-4287	1
COVER,ECU (Ref # 14093)	14093-1531	1
BRACKET-COMP,CROSS FRAME (Ref # 23062)	23062-1494	1
BRACKET-SWINGARM,LH (Ref # 32036)	32036-0378	1
BRACKET-SWINGARM,RH (Ref # 32036A)	32036-0379	1
BRACKET-SHOCKABSORBER,LH (Ref # 32037)	32037-0455	1
BRACKET-SHOCKABSORBER,RH (Ref # 32037A)	32037-0456	1
CASE,SEAT UNDER (Ref # 32099)	32099-0787	1
PAD,BATTERY CASE (Ref # 39156)	39156-2220	1
NUT,WELL,5MM (Ref # 92015)	92015-1757	2
PIN,6X23 (Ref # 92043)	92043-0746	2
BOLT,FLANGED,10X40 (Ref # 92154)	92154-2812	1
BOLT,FLANGED,10X54 (Ref # 92154A)	92154-2813	2
BOLT-FLANGED,8X14 (Ref # 92154B)	92154-3851	2
BOLT-FLANGED,10X25 (Ref # 92154C)	92154-4058	4
BOLT,6X14 (Ref # 92154D)	92154-4129	1
BOLT,FLANGED,10X65 (Ref # 92154E)	92154-4394	1
DAMPER,9.5X18X6 (Ref # 92161)	92161-1473	1
NUT,LOCK,FLANGED,10MM (Ref # 92210)	92210-1139	2
BOLT-FLANGED,5X14 (Ref # 130)	130BA0514	2
BOLT-FLANGED,8X18 (Ref # 130A)	130CA0818	2
PIN-SNAP,1.2X21.2 (Ref # 554)	554DA0600	2

© 2026 Kawasaki Motors Corp., U.S.A.