2026 Ninja 500

PARTS DIAGRAM

Water Pump

Kawasaki
Let the Good Times Roll®

E3031

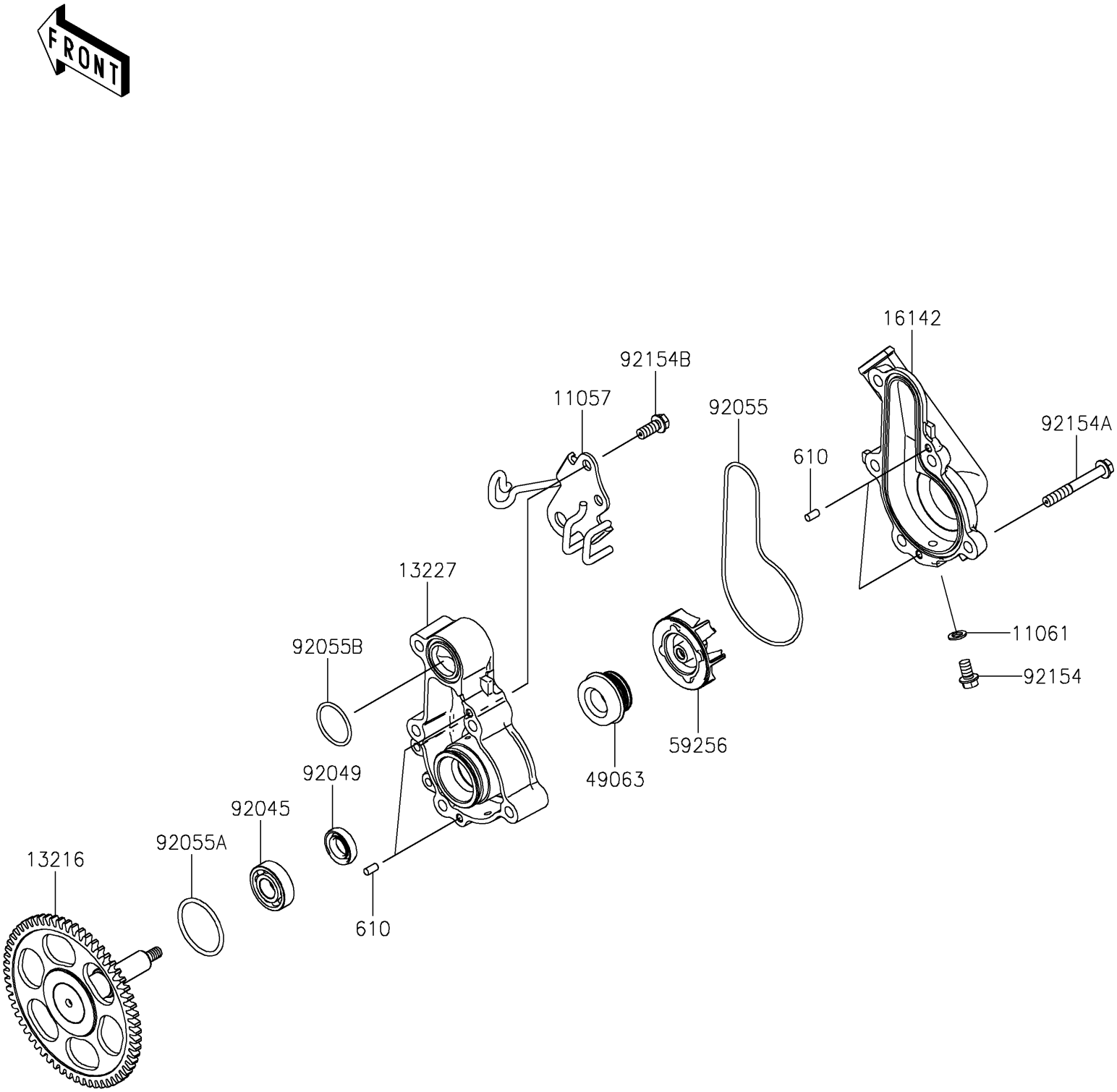

© 2026 Kawasaki Motors Corp., U.S.A.

2026 Ninja 500

PARTS LIST

Water Pump

Kawasaki
Let the Good Times Roll®

ITEM NAME	PART NUMBER	QUANTITY
BRACKET (Ref # 11057)	11057-7599	1
GASKET,DRAIN (Ref # 11061)	11061-0875	1
GEAR-COMP,WATER PUMP,60T (Ref # 13216)	13216-0920	1
HOUSING (Ref # 13227)	13227-0040	1
COVER-PUMP,WATER (Ref # 16142)	16142-0757	1
SEAL-MECHANICAL (Ref # 49063)	49063-1055	1
IMPELLER (Ref # 59256)	59256-0554	1
BEARING-BALL (Ref # 92045)	92045-0067	1
SEAL-OIL,12X22X5 (Ref # 92049)	92049-0783	1
RING-O (Ref # 92055)	92055-0889	1
RING-O,31.20X2.4 (Ref # 92055A)	92055-0896	1
RING-O,23.3X1.9 (Ref # 92055B)	92055-1555	1
BOLT,FLANGED,6X10 (Ref # 92154)	92154-2344	1
BOLT,FLANGED,6X45 (Ref # 92154A)	92154-2789	5
BOLT,FLANGED,6X14 (Ref # 92154B)	92154-2838	2
ROLLER,4X8 (Ref # 610)	610A0408	4

© 2026 Kawasaki Motors Corp., U.S.A.